Dear
Dear

PAPER MACHINE・DRYPART

OIL FLOW

FLOW METER

Instruction Manual

Our Code Number :

APPROVAL	STAMP	CONTACT

KOWA CORPORATION
TEL. 0790-27-1315 FAX. 0790-27-1314

改訂２：2010/5/27

Safety Precautions

○ Before installation, operation and inspection of repair, please read this Instruction Manual so that you can use our products properly.
Also please use products after you get knowledge of products, safety information and precautions.
This Lubricating System shows safety information as a safety sign on equipment.
Please handle them with care especially these parts tagged a safety sign.
Mainly, there are two types of safety sign, "Warning" and "Caution". In addition, there are several equal signs.
Every sign shows important information, therefore please keep information

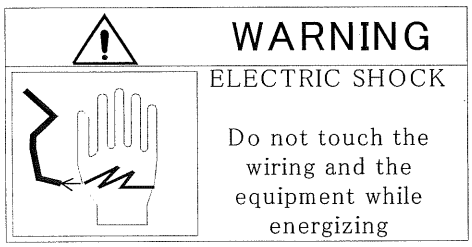

ELECTRIC SHOCK

Do not touch the equipment and the wiring while driving .

It is likely to die when handling is mistaken .

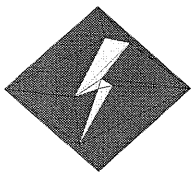

ELECTRIC SHOCK

Do not touch the equipment and the wiring while driving .

It is likely to die when handling is mistaken .

When handling mistaken, it becomes important injury or a serious damage only accident.

Instruction for proper use

1. Keep a sensor panel away from water.
   It may cause malfunction.
   Moreover, it may cause a fire and other serious accidents.

2. Sensor Panel
   Do not operate a product with wet hands.
   It may cause electric shock.

3. Sensor Panel (Sensor monitor)
   Do not open a door during turning on electricity.
   When you need to operate or do other things, only qualified people can do.
   Also do not touch a terminal and other parts during operation.
   It may cause electric shock.

4. Wiring Work
   When you install jumping wires and wiring work at sensor disuse area, you should check if you already turn off the power source.
   It may cause electric shock.

5. A flowmeter is caught in a glass tube sometime because of extraneous matter or dirt. Please clean the rod for the cone setting up (or for cleaning) by moving top and bottom.
   Please refer the Instruction Manual for Oil Flow Flow Meter "1 - 2 (4)"
   When you adjust a flow rate with an adjust valve and other things, a float moves up and down. If a float does not move, it is highly possible that a float may be caught by extraneous matter, therefore be careful.

INDEX

1. Specification ---------- 4

1. 1 Structure and Overall ---------- 4
1. 2 Operation Outline ---------- 5
1. 3 Main Specification ---------- 6
(1) Range of use viscosity
(2) Use Temperature
(3) Use Pressure
(4) Set Position
(5) Range of Flow Rate
(6) Piping ports
(7) Dimensions
(8) Accessories

2. Setting Flow Rate ---------- 7

3. Maintenance ---------- 8

3. 1 Cleaning Glass Tube ---------- 8
3. 2 A Float Operation Check ---------- 8
3. 3 An Internal Parts Check ---------- 8

4. Attached Drawings ---------- 11

Rating Curve	KOF-10	KOF-10/SPS	KOF-10U	KOF-15

Without Sensor Type

	KOF-10	KOF-10/SPS	KOF-10U	KOF-15
Outline	e-FA-0837	e-FA-0837SPS-R2	e-KOF-10U	e-FA-0839
An assembly Drawing	e-FA-0835-R7	e-SA-KOF10-SPS	e-SA-KOF10U	e-FA-0836-R5

With Sensor Type

	KOF-A-10	KOF-A-10/SPS	KOF-A-10U	KOF-A-15
Outline	e-FA-0838	e-FA-0838SPS-R2	e-KOF-A-10U	e-FA-0840-R1
An assembly Drawing	a common drawing with No Sensor Type			

Spare Parts

	KOF-10	KOF-10/SPS	KOF-10U	KOF-15
KIT-1	e-KOF10-KIT1-R1	e-KOF10-SPS-KIT1	e-KOF10U-KIT1	e-KOF15-KIT1-R1
KIT-2	e-KOF10-KIT2-R1			e-KOF15-KIT2-R1
KIT-3	e-KOF10-KIT3-R1		e-KOF10U-KIT3	e-KOF15-KIT3-R1
KIT-4	e-KOF10-KIT4-R1			e-KOF15-KIT4
KIT-5	e-KOF1015-KIT5			

1. Specification

As to specifications and other information for each part, please refer the instruction or drawings.

For Oil Flow, using come mechanism makes it possible to measure any temperature, viscosity of oil and pressure correctly.
Depend on range of setting flow rate, there are four types of flow meter and you can coexist different flow rating flow meter in a body. Therefore you can change a size for each flow meter by exchanging parts.

1. 1 Structure and Overall

(1) Structure of Oil Flow is put flow meter from 1pc to 10pc just beside each other on a common body.

(2) Composition parts for each flow meter are below.
Glass Tube (the heatproof glass)
Corn (set flow rate、clean inside glass)
Float (check flow rate)
Adjust Valve (set flow rate)
Alarm Sensor (check a decline of flow rate) : Option. Also you can add later.

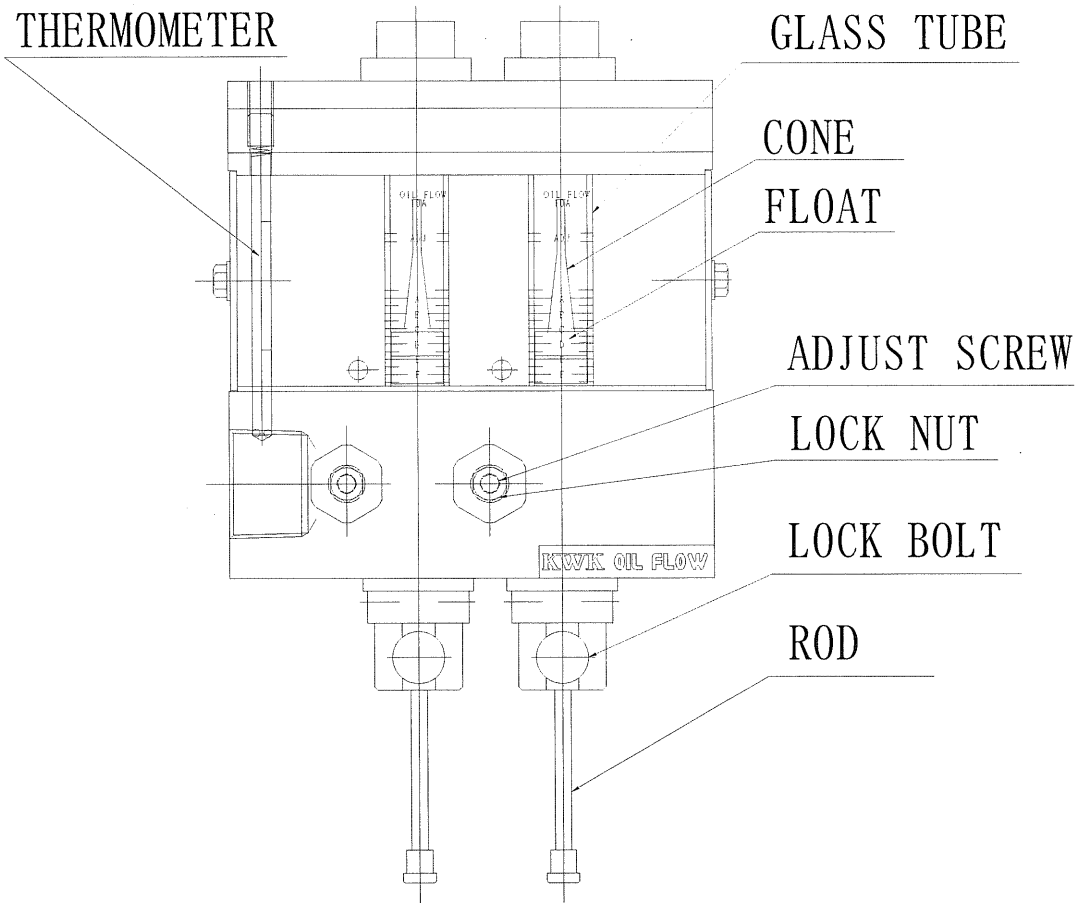

1．2 Operation Outline

(1) Outline

When you open an adjust valve, oil runs to glass tube. Oil which is set at each flow meter goes out from each exit and supply each bearing with oil. In addition, as a characteristic of adjust screws is that a hole which oil flows is in a fan shape. Therefore it is less dust or other extraneous material adheres to these crews than to general needles.

Setting flow rate should be done for each flow meter.

As to a way to set flow rate, please refer "2, Setting Flow Rate".

(2) A way to fasten

Put the head of bolt into a hall for installation which is on the back of body, and fasten it with nuts on bracket of angles.

(3) An entrance and exit for oil

Entrance : There are on the under back of the body and side, however usually the back one is used.

Exit : At an upper part of a back side of each glass tube.

(4) Cleaning of glass tubes

There is a ring at the bottom of a cone and it helps to clean dirt on a glass tube by moving top and bottom.

Notion
When oil is not runing but a float does not go down, the float might stuck because of dirt, therefore please clean a glass tube or do a resolution check.

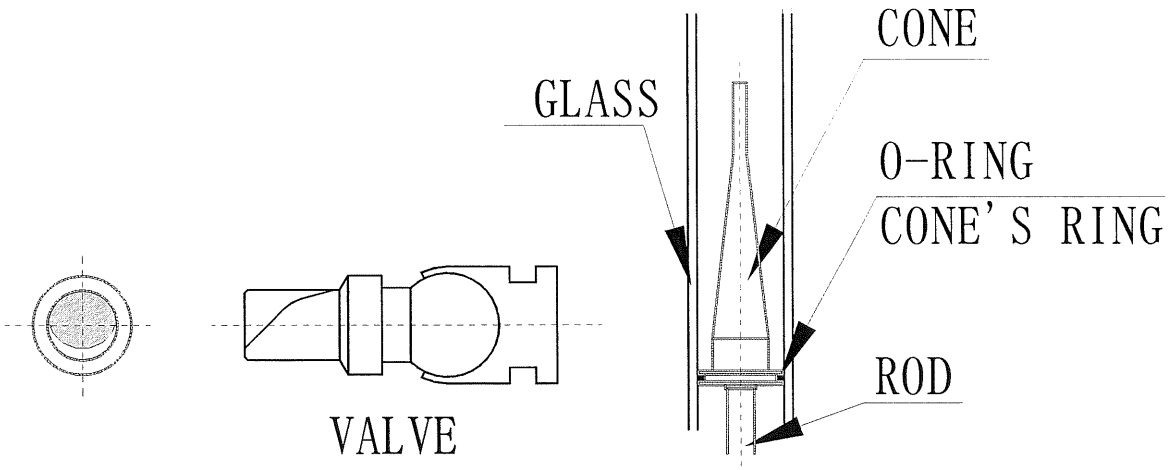

1．3 Main Specification

(1) Range of use viscosity
７５ ～ ４６０ cst

(2) Use Temperature
Max ７０℃

(3) Use Pressure
Max. １．０ＭＰａ

(4) Set Position
The lowest position of a cone is below.
If you set under lower than below, flow rate does not become stable.

KOF-10U : B line or more
KOF-10-SPS : A line or more
KOF-10 : A line or more
KOF-15 : A line or more

(5) Range of Flow Rate (Please refer the reting curve)

KOF-10U	150 cSt	0.06 l/min～0.45 l/min
	220 cSt	0.042 l/min～0.285 l/min
KOF-10SPS	150 cSt	0.06 l/min～1.3 l/min
	220 cSt	0.04 l/min～0.7 l/min
KOF-10	150 cSt	0.14 l/min～2.1 l/min
	220 cSt	0.1 l/min～1.5 l/min
KOF-15	150 cSt	0.25 l/min～4.9 l/min
	220 cSt	0.16 l/min～3.7 l/min

You can change a size for each flow meter by exchanging parts.

(6) Piping ports

	For 1 Dic. port	For 2～10 Dic. ports
Supply Port	Ｒｃ１／２	Ｒｃ１
Discharge Port	Ｒｃ１／２	

(7) Dimensions

KOF-10U : KOF-10U
KOF-10/SPS : FA-0837SPS-R2
KOF-10 : FA-0837
KOF-15 : FA-0839

(8) Accessories (Option)

Alarm Sensor : Check a decline of flow rate with a proximity switch.
Sensor Panel : When this receives unusual signals from each sensor, it shows an unusual condition part and outputs a warning to a control of lubricating unit.
Notion: Please refer to the instruction manual for a flow sensor panel

2. Setting Flow Rate

A reting curve is based on requested flow rate, viscosity and use temperature.
Please check following things.
1, Pressure is proper before you adjust flow rate.
2, Carrying oil line included a flow meter is connected with a return piping.

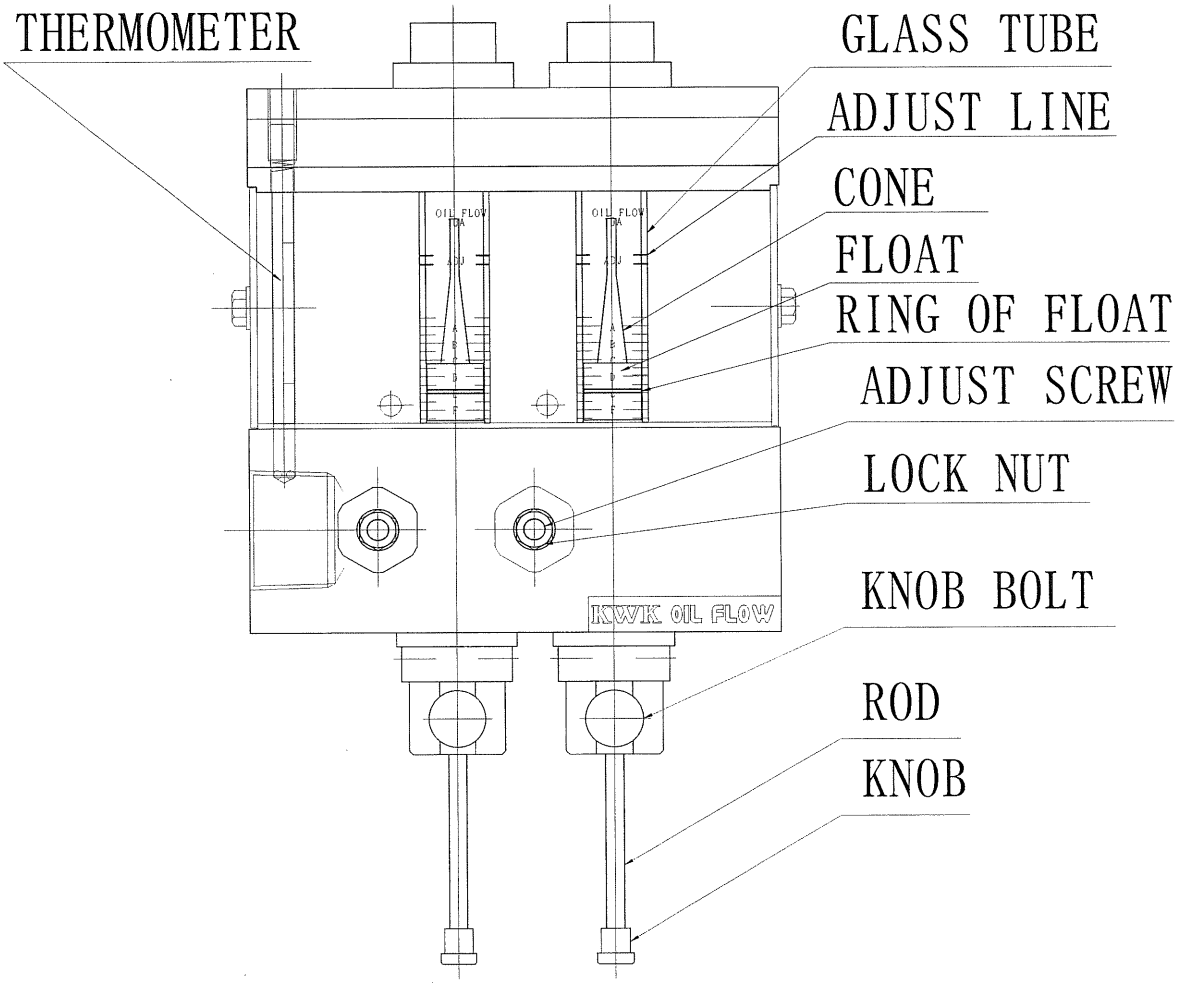

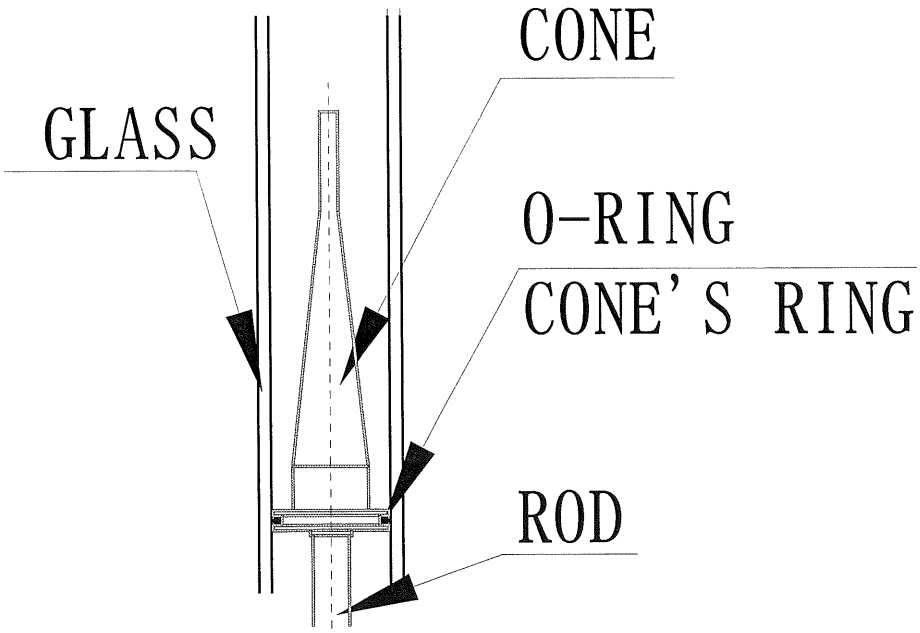

(1) Check a rating curve and choose a glass tube which matches your demand.
(2) Loose knob bolts.
(3) Move a rod (Cone setting) the top and bottom, and place the bottom of the cone's ring at the marked point.
(4) Fasten knob bolts.
(5) Do above from (1) to (4) process to every each oil flow.
(6) Loose a lock nut of the adjust screw and operate the screw and open the valve. Then set the ring of the float on ADJ(adjust) line written on the top part of the glass tube.
(7) One by one, operate process :(6) for other meter.
(8) One by one, as you operate the adjust screw and open the valve, a position of the float which you set before may change, therefore some fine-tuning would be needed.
(9) After fine-tuning and all float are set at ADJ line, fasten all lock nut of adjust screws.

Notion : Rating Curve
KOF-10U, KOF-10/SPS, KOF-10, KOF-15

3. Maintenance

We recommend you to inspect a flow meter at regular intervals.
Below are items that are to be inspected.

3. 1 Cleaning Glass Tube

You can clean a glass tube with a ring of the bottom of a cone by moving a cone setting-rod from the top to down.
If it is too dirty, please do a resolution check as a check of interior parts.
Also then you do a resolution check, you should not miss any parts.
Please refer the attached drawings.

3. 2 A Float Operation Check

When you close an entrance of an adjust screw or an oil flow, or when you stop the pump, float should be go down. Even if you just stop the pump, a float may not go down. (Oil inside a pipe flows)
In the case that the float does not go down, the float may be stuck because of dust or extraneous matter. Therefore move the cone from the top to the bottom, check if the float goes down.

3. 3 An Internal Parts Check

(1) Remove oil and clean while checking whether there are any scratches.

(2) Check whether following parts are contained. A float, a cone, an adjust valve and gasket etc. Please take every possible care for, especially, a glass tube, a gasket, a glass tube receiving and a spring receiving.

(3) Replace damaged parts.

A drawing for spare parts is below

Reference drawing

	KOF-10U	KOF-10/SPS	KOF-10	KOF-15
Assembly drawing	e-SA-KOF10U-R0	e-SA-KOF10-SPS-R0	e-FA-0835-R7	e-FA-0836-R5
KIT-1	e-KOF10U-KIT1-R0	e-KOF10-SPS-KIT1-R0	e-KOF10-KIT1-R1	e-KOF15-KIT1-R1
KIT-2	e-KOF10-KIT2-R1			e-KOF15-KIT2-R1
KIT-3	e-KOF10U-KIT3-R0	e-KOF10-KIT3-R1		e-KOF15-KIT3-R1
KIT-4	e-KOF10-KIT4-R1			e-KOF15-KIT4-R0
KIT-5	e-KOF1015-KIT5-R1			

You can take 「ＫＩＴ－２」 out if you take a cap off
You can take 「ＫＩＴ－５」 out if you take a valve guide off.
You can take ＫＩＴ－１，３、４」 out if you take a cap and a rod guide out.

Please refer the 「ＫＩＴ－１」 resolution instruction.

（4） Resolution Instruction ＫＩＴ－１
Explanation of resolution is based on KOF-10. As for other things, please follow KOF-10.
Please be careful not to miss any parts which you take out.

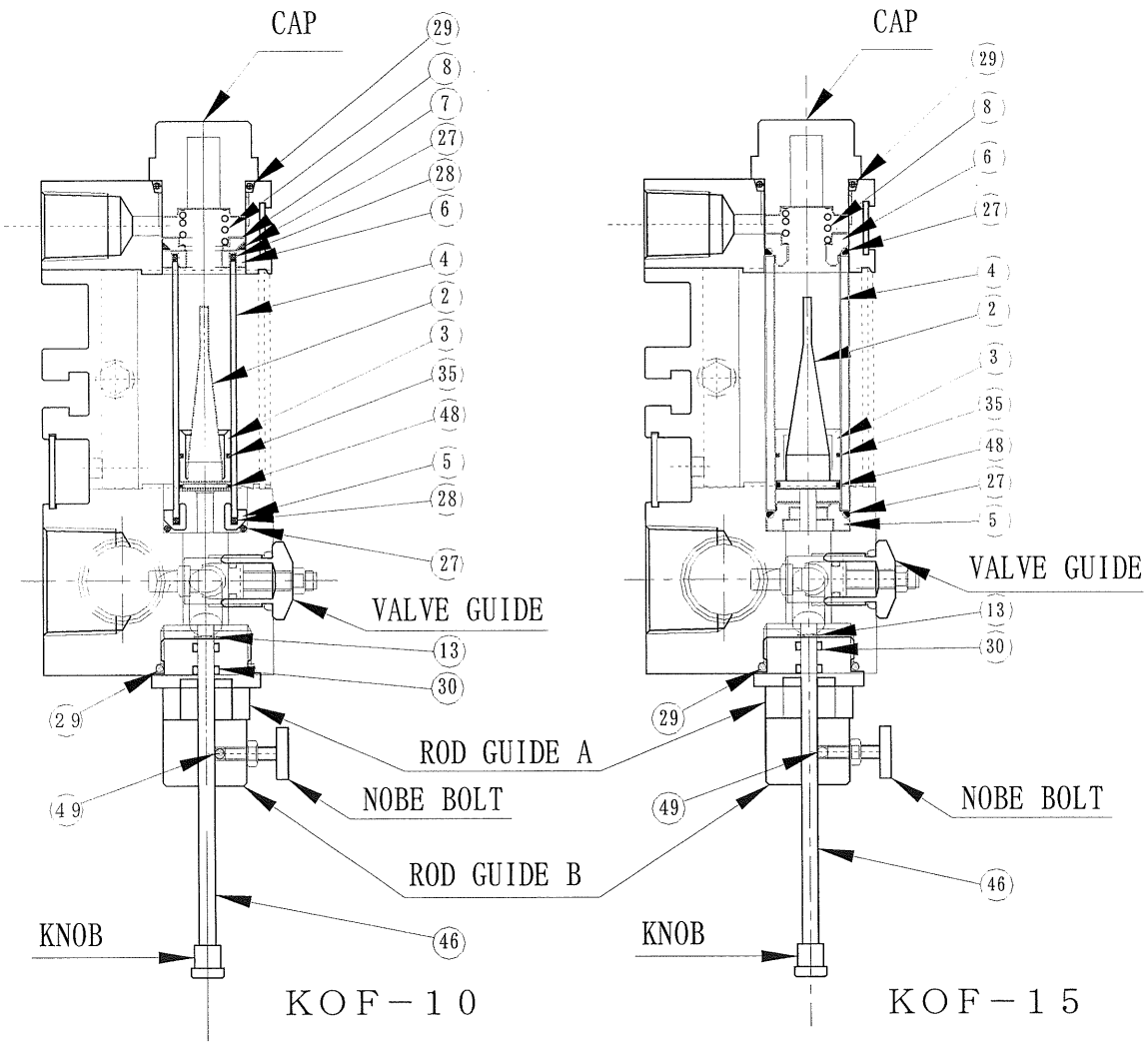

a. Take out a cap, a spring (#8), a spring receiving (#7), a glass tube receiving, (#6). At this time, check whether O-ring (#27,28,29) is out or not.
b. Extract (#4) out to upper.
c. Take a float (#3) out.
d. Remove a knob of a cone setting rod (#46).
e. Take out a nylon ball(#49). If you can not take a ball out, you can take it out when you pull a rod out (at next process (f)).
f. Push a rod (#46) up and from the top side, take a cone(#2) and a rod out. At this time, a nylon ball of a knob bolt may fall, therefore be careful not to lose it.
g. Remove a rod guide A and B. You should check whether O-ring (#29) is out or not.
h. A rod guide A and B are removable. If you need an exchange of O-ring (#30), please disassemble it.

Notice 1 : Assembling should be done as an opposite order.
Notice 2 : When you assemble it, please be careful not to hurt O-ring.

REV	改定内容DESCRIPTION	DATE	SIGN
△			
△			
△			
△			

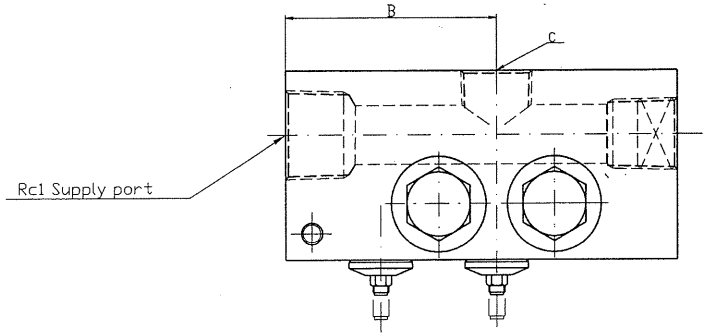

NOTE
1 : THIS DRAWING 2 DISCHARGE PORTS
2 : MAX. PRESSURE 1MPa

ATTACHMENT
2.5 HEXAGON SPANNER

Discharge port	A	B	C
1	105	58	Rc1/2
→ 2	149	80	Rc1
4	237	124	Rc1
6	325	168	Rc1
8	413	212	Rc1
10	501	256	Rc1

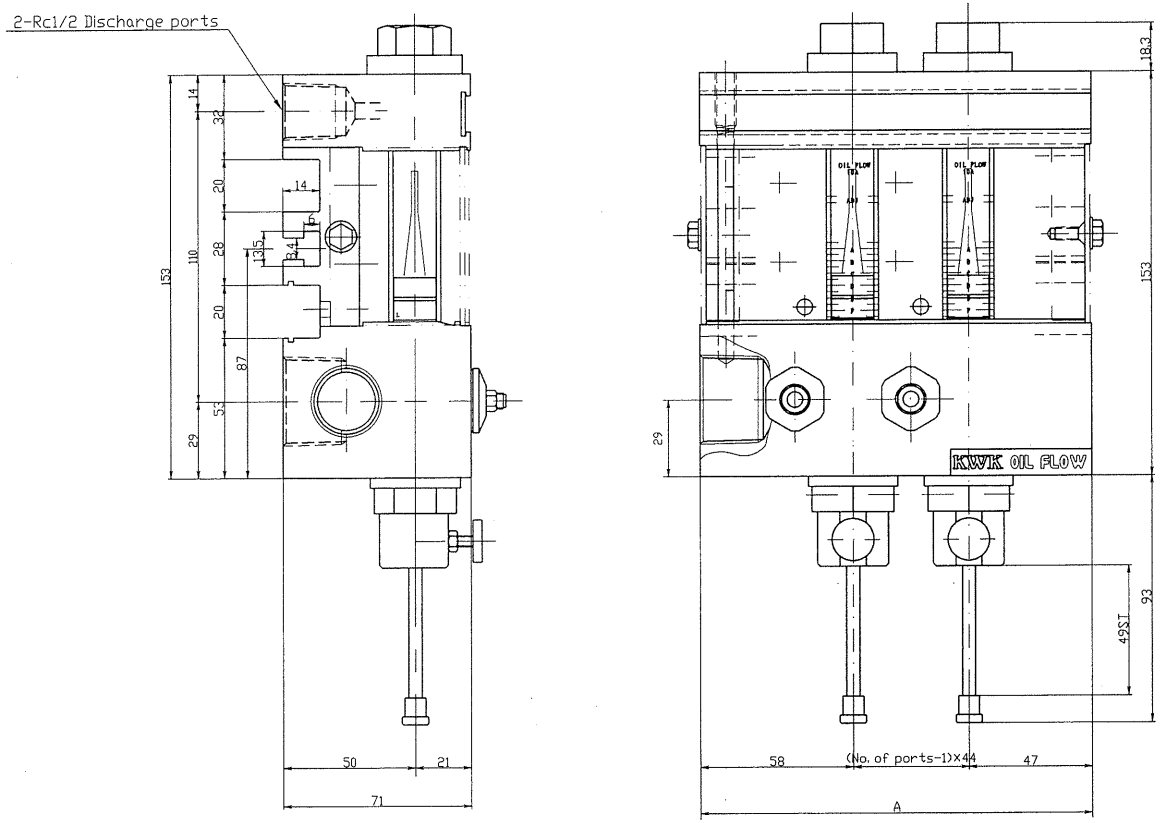

10A

CUSTOMER	
SPECIFICATION	
CHECKED BY	DRAWN BY
	T. T
2010.5.20	JAN.26.'01
SEC.CHIEF	DESIGNED BY

KOF-10
OIL FLOW

KOWA CORP.
OSAKA JAPAN

DWG. No. e-FA-0837 △
CFD.No.
CODENo.

3RD ANGLE PROJECTION | SCALE 1/1 | DATE OF ISSUE | MFG. NO.

(A1)

協議印
出図先
購買
製造
客先
校
複写部取 A1 A3
出図日

改定REV	改定内容DESCRIPTION	日付DATE	担当DESIGN
△			
△			
△			
△			

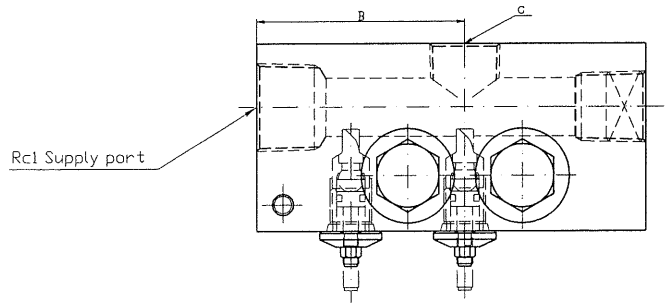

NOTE
1 : THIS DRAWING 2 DISCHARGE PORTS
2 : MAX. PRESSURE 1MPa

ATTACHMENT
2.5 HEXAGON SPANNER

Discharge port	A	B	C
1	105	58	Rc1/2
2	149	80	Rc1
4	237	124	Rc1
6	325	168	Rc1
8	413	212	Rc1
10	501	256	Rc1

Specification of Switch
Voltage : DC12V to 24V
Lode current : 3 to 100 mA
Use Temperature : -25 to +70℃
(Do not freeze)
Use Humidity : 45 to 85%

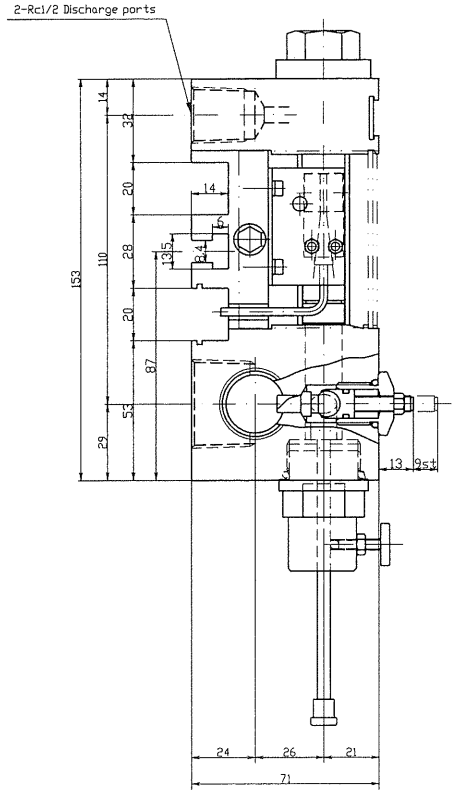

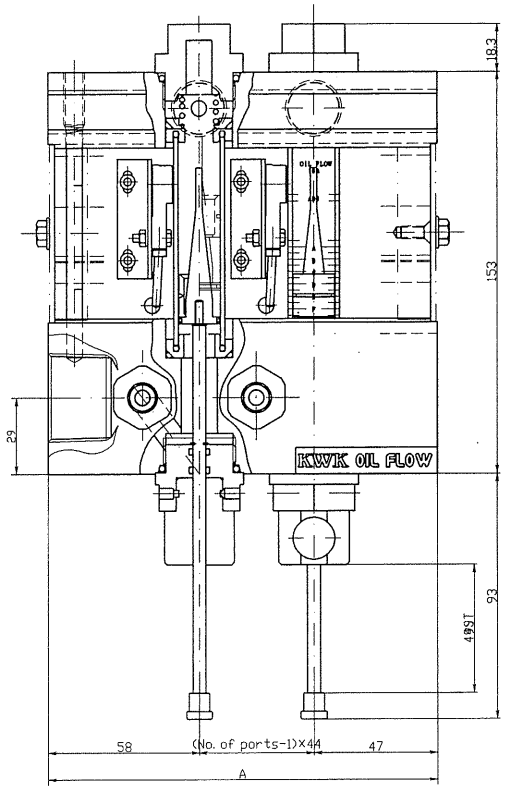

10A

CUSTOMER	
SPECIFICATION	
CHECKED BY: Shimomura	DRAWN BY: T. T
2010.5.10	JAN.26.'01
S.E.C. CHIEF: Miyazaki 5.20.'10	DESIGNED BY

KOF-A-10
OIL FLOW
WITH ALARM SWITCH

KOWA CORP.
OSAKA JAPAN

DWG. No. e-FA-0838 △
CFD. No.
CODE No.
3RD ANGLE PROJECTION
SCALE 1/1
DATE OF ISSUE
MFG. NO.
(A1)

監査印 出図先 顧客 製造 客先 他 客写部数 A1 A3 出図日

REV	改訂内容 DESCRIPTION	DATE	DESIGN
△			
△			
△			
△			

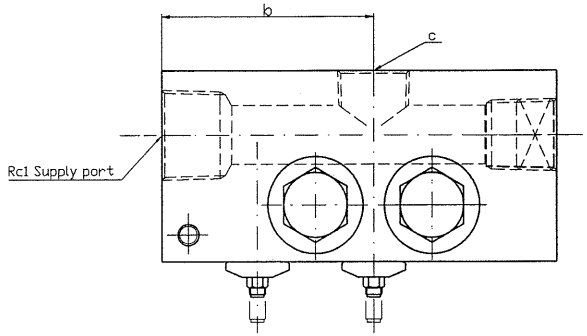

NOTE
1 : THIS DRAWING 2 DISCHARGE PORTS
2 : MAX. PRESSURE 1MPa
*3 : When it is composed only 10U type
*4 : Only when existing together to another type

ATTACHMENT
2.5 HEXAGON SPANNER

Discharge port	A	B	C
1	105	58	Rc1/2
2	149	80	Rc1
4	237	124	Rc1
6	325	168	Rc1
8	413	212	Rc1
10	501	256	Rc1

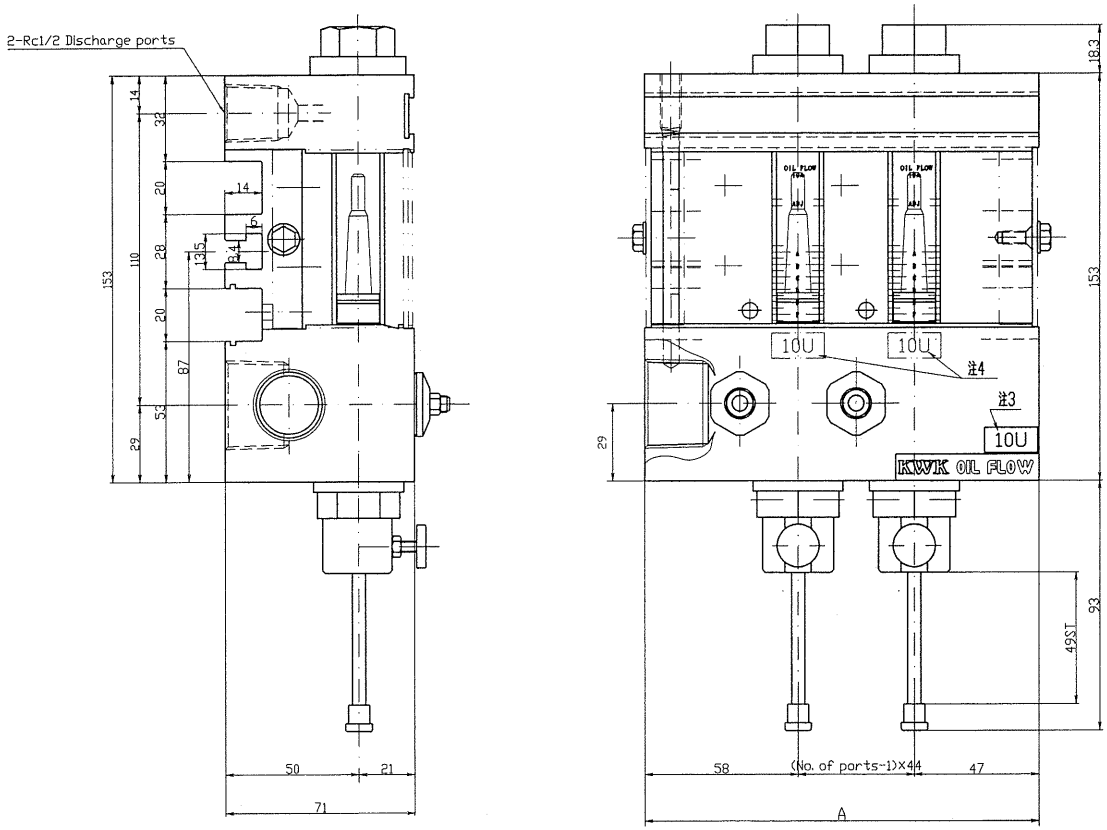

10U

CUSTOMER	
SPECIFICATION	
CHECKED BY: Shimano 2010.5.26	DRAWN BY: 勝取 2010.1.12
APPROVED BY: Mizuzaki 5.20.10	DESIGNED BY: 宮崎 2009.2.9
KOWA CORP. OSAKA JAPAN	DWG.No. e-KOF-10U △0
	CFD.No.
	CODE No.
3RD ANGLE PROJECTION	SCALE
	DATE OF ISSUE / MFG. NO.

KOF-10U
OIL FLOW

協議中
出図先
購買
製造
客先
控
複写部数 A1 A3
出図日

(A1)

REV	改訂内容 DESCRIPTION	DATE	DESIGN
△			
△			
△			
△			

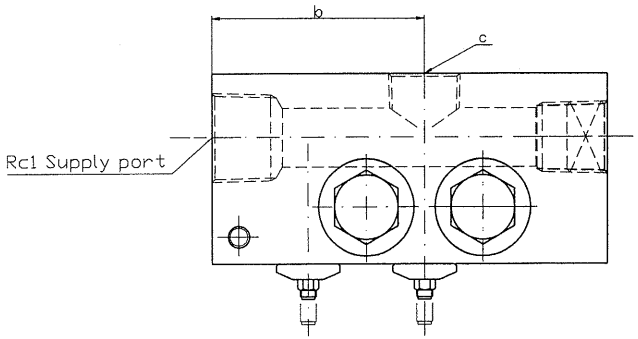

NOTE
1 : THIS DRAWING 2 DISCHARGE PORTS
2 : MAX. PRESSURE 1MPa
*3 : When it is composed only of 10AU type
*4 : Only when existing together to another type

ATTACHMENT
2.5 HEXAGON SPANNER

Discharge port	A	B	C
1	105	58	Rc1/2
2	149	80	Rc1
4	237	124	Rc1
6	325	168	Rc1
8	413	212	Rc1
10	501	256	Rc1

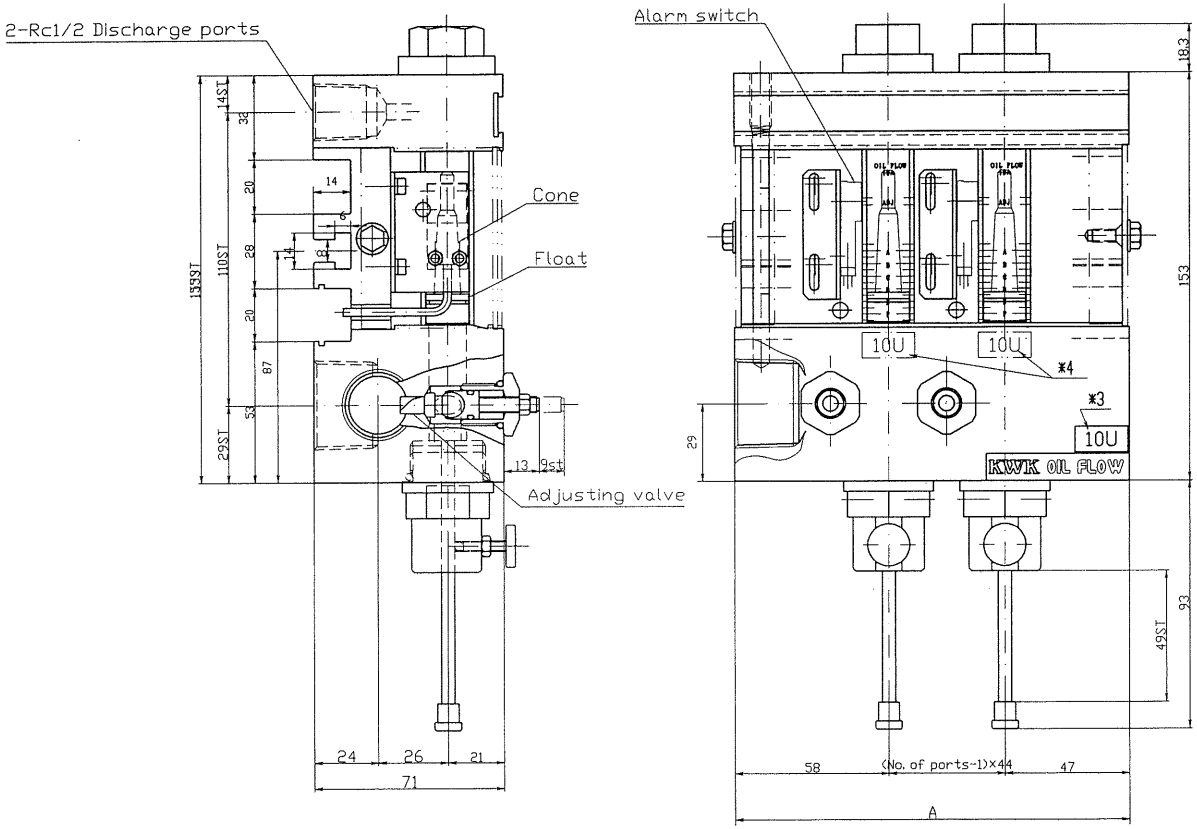

Specification of Switch
Voltage : DC12V to 24V
Lode current : 3 to 100 mA
Use Temperature : -25 to +70℃
(Do not freeze)
Use Humidity : 45 to 85%

10U

CUSTOMER	
SPECIFICATION	
CHECKED BY / DRAWN BY	勝取 2010.1.13
APPROVED BY / DESIGNED BY	宮崎 2009.2.9
KOWA CORP. OSAKA JAPAN	KOF-A-10U OIL FLOW WITH ALARM SWITCH
DWG.No.	e-KOF-A-10U △0
CFD.No.	
CODE No.	
3RD ANGLE PROJECTION	SCALE
DATE OF ISSUE	MFG. NO.

協議印 出図先 購買 製造 客先 控 複写部数 A1 A3 出図日

改定REV	改定内容DESCRIPTION	日付DATE	担当DESIGN
△	変更	H13-7-2	高田
△	English	2010.5.17	F.M
△			
△			

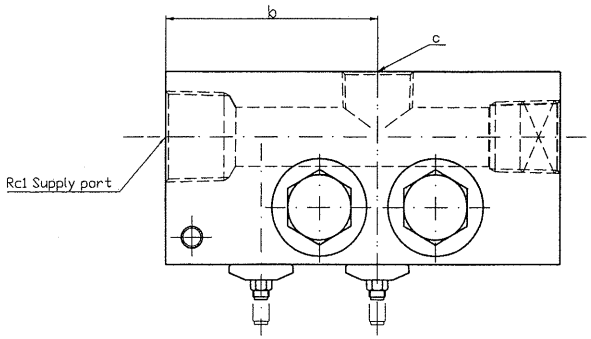

NOTE
1 : THIS DRAWING 2 DISCHARGE PORTS
2 : MAX. PRESSURE 1MPa
*3 : When it is composed only 10/SPS type
*4 : Only when existing together to another type

ATTACHMENT
2.5 HEXAGON SPANNER

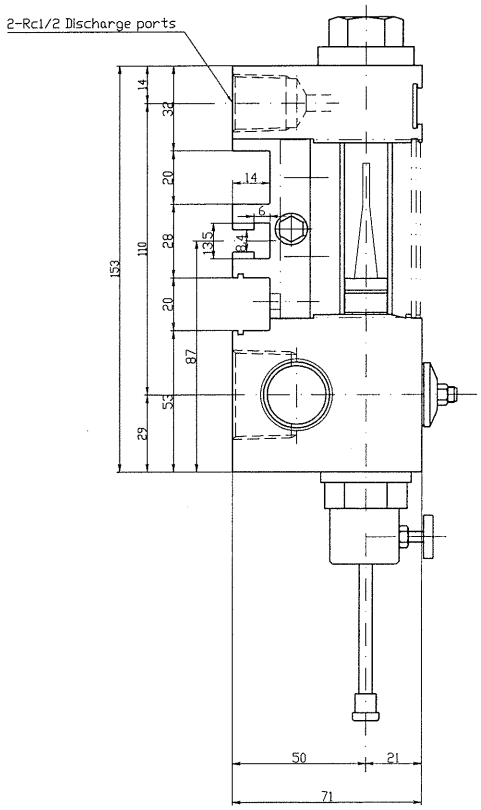

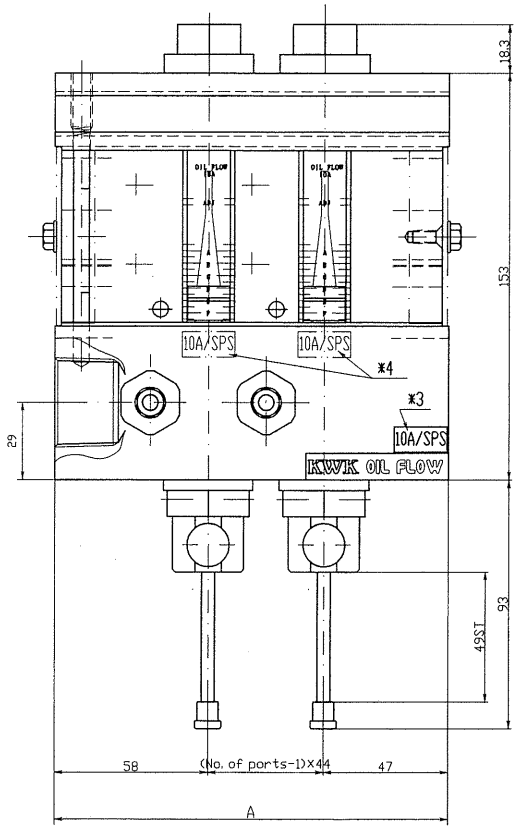

Discharge port	A	B	C
1	105	58	Rc1/2
2	149	80	Rc1
4	237	124	Rc1
6	325	168	Rc1
8	413	212	Rc1
10	501	256	Rc1

10A/SPS

CUSTOMER	
SPECIFICATION	
CHECKED BY: Shimamoto 2010.5.17	DRAWN BY: T. T H13-1-25
S.E.G. CHIEF: Hirazaki	DESIGNED BY: 高田 H13-1-25

KOWA CORP.
OSAKA JAPAN

KOF-10/SPS
OIL FLOW

DWG. No. e-FA-0837SPS △2
CFD. No.
CODE No.

3RD ANGLE PROJECTION | SCALE 1/1 | DATE OF ISSUE | MFG. NO.

(A1)

協議印 | 出図先 | 組図 | 製造 | 客先 | 控 | 複写部数 A1 A3 | 出図日

REV	改定内容 DESCRIPTION	日付 DATE	担当 DESIGN
△	変更	H13-7-2	高田
△	English	2010.5.17	FM
△			
△			

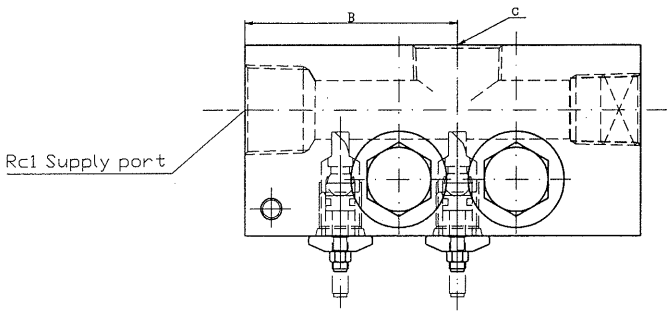

NOTE
1 : THIS DRAWING IS 2 DISCHAGRE PORTS
2 : MAX. PRESSURE 1MPa
*3 : When it is composed only 10A/SPS type
*4 : Only when existing together to another type

ATTACHMENT
2.5 HEXAGON SPANNER

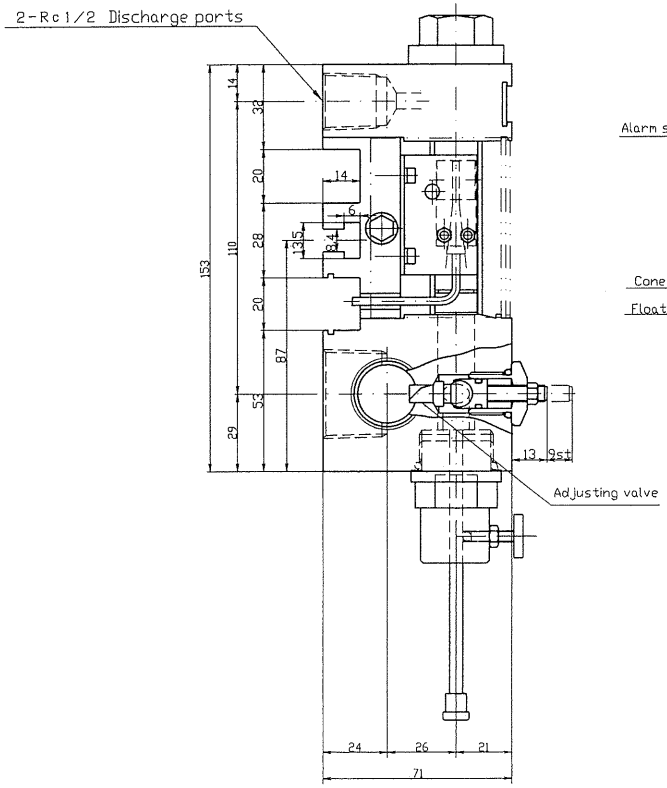

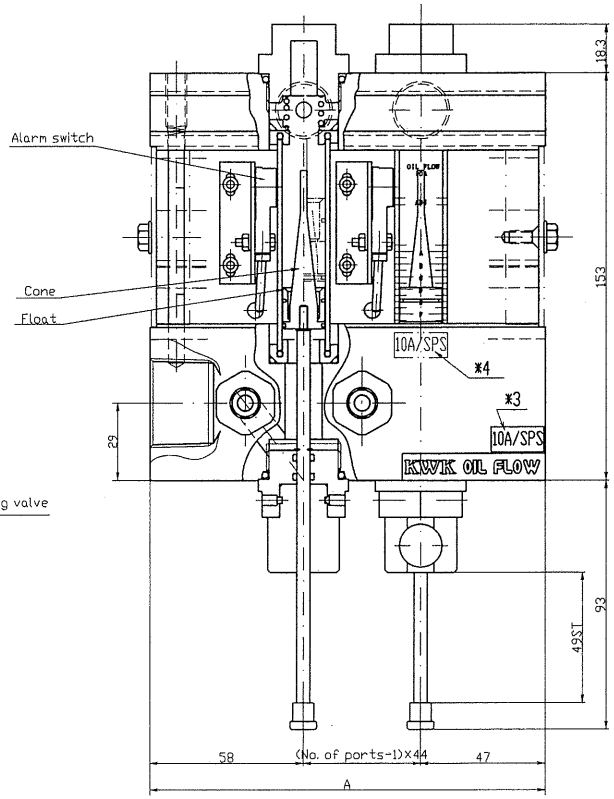

10A/SPS

Discharge port	A	B	C
1	105	58	Rc1/2
2	149	80	Rc1
4	237	124	Rc1
6	325	168	Rc1
8	413	212	Rc1
10	501	256	Rc1

Specification of Switch
Voltage : DC12V to 24V
Lode current : 3 to 100 mA
Use Temperature : -25 to +70℃
(Do not freeze)
Use Humidity : 45 to 85%

CUSTOMER	
SPECIFICATION	
CHECKED BY: Shimano 2010.5.20	DRAWN BY: T. T H13-1-25
S.E.C. CHIEF: Hizaki 2010.5.20	DESIGNED BY: 高田 H13-1-25
KOWA CORP. OSAKA JAPAN	DWG. No. e-FA-0838SPS △2
	CFD. No.
	CODE No.
3RD ANGLE PROJECTION	SCALE 1/1
	DATE OF ISSUE / MFG. NO.

KOF-A-10/SPS
OIL FLOW
WITH ALARM SWITCH

(A1)

設計印	
出図先	
顧客	
製造	
客先	
検	
複写部数	A1 A3
出図日	

改定REV	改定内容 DESCRIPTION	日付DATE	担当SIGN
△			
△			
△			
△			

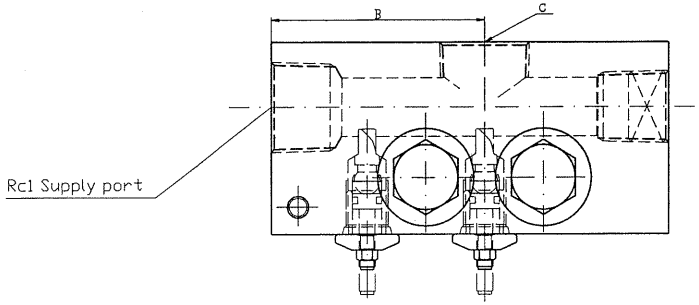

NOTE
1 : THIS DRAWING 2 DISCHARGE PORTS
2 : MAX. PRESSURE 1MPa

ATTACHMENT
2.5 HEXAGON SPANNER

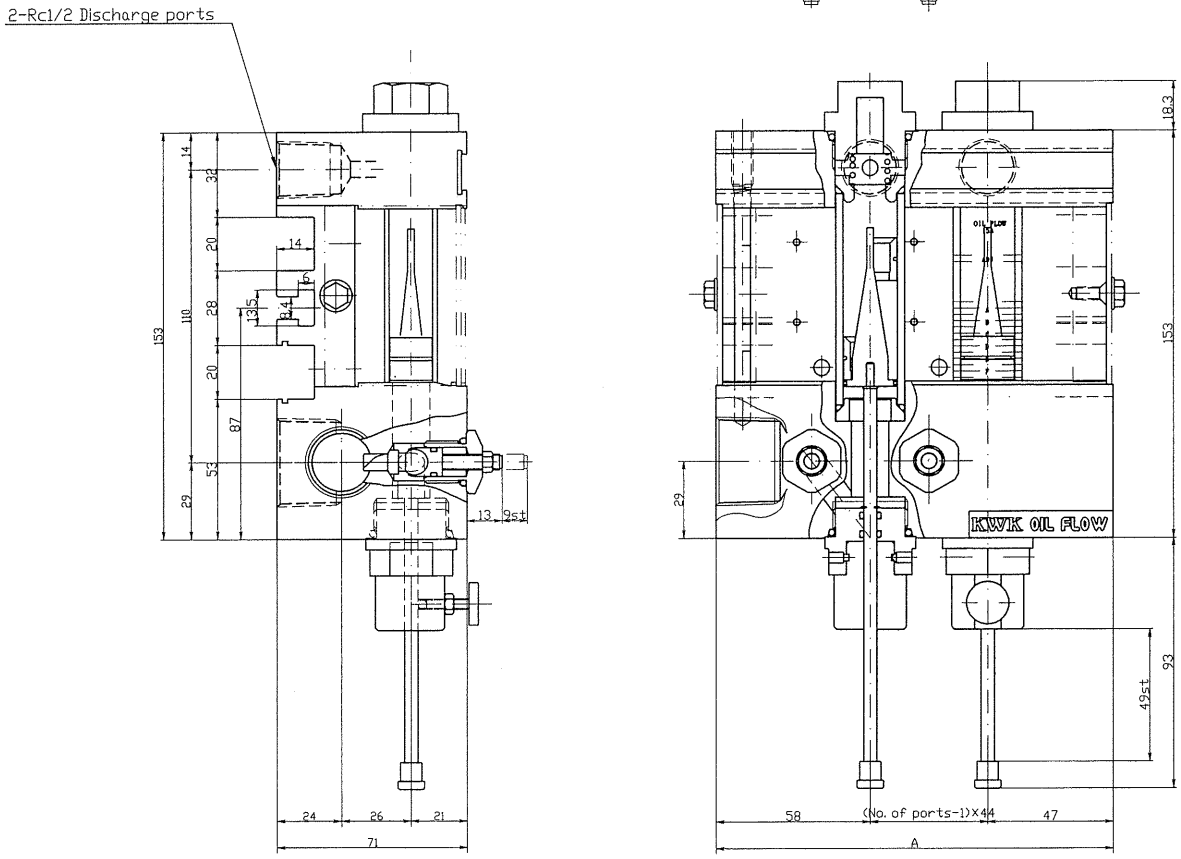

Discharge port	A	B	C
1	105	58	Rc1/2
2	149	80	Rc1
4	237	124	Rc1
6	325	168	Rc1
8	413	212	Rc1
10	501	256	Rc1

15A

CUSTOMER	
SPECIFICATION	
CHECKED BY: Shimomura 2010.5.20	DRAWN BY: T. T JAN.26.'01
S.E.C. CHIEF: Miyazaki 5.20.'10	DESIGNED BY
KOWA CORP. OSAKA JAPAN	KOF-15 OILL FLOW
	DWG. No. e-FA-0839 △
	CFD. No.
	CODE No.
3RD ANGLE PROJECTION	SCALE 1/1
	DATE OF ISSUE / MFG. NO.

協議印 / 出図先 / 購買 / 製造 / 客先 / 検 / 複写部数 A1 A3 / 出図日

(A1)

改定REV	改定内容DESCRIPTION	日付DATE	担当SIGN
△	DE	H14-4-19	高田
△			
△			
△			

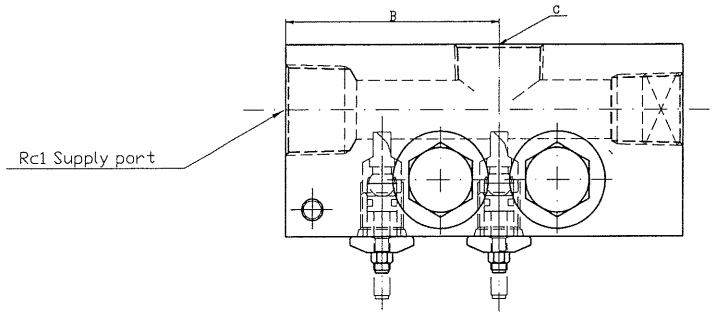

NOTE
1 : THIS DRAWING 2 DISCHARGE PORTS
2 : MAX. PRESSURE 1MPa

ATTACHMENT
2.5 HEXAGON SPANNER

Discharge port	A	B	C
1	105	58	Rc1/2
2	149	80	Rc1
4	237	124	Rc1
6	325	168	Rc1
8	413	212	Rc1
10	501	256	Rc1

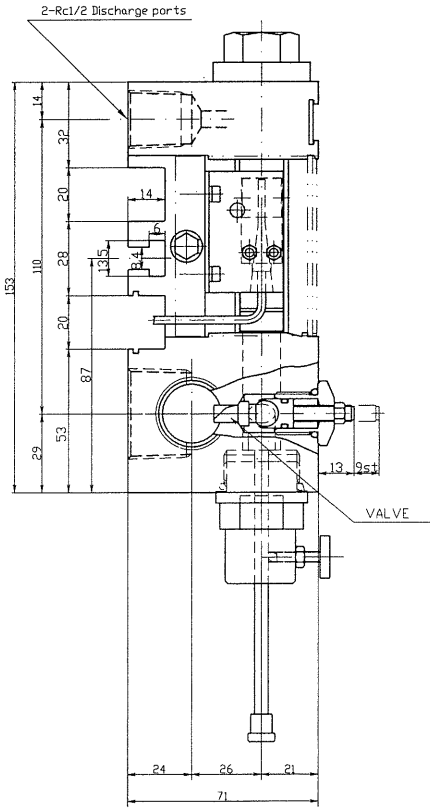

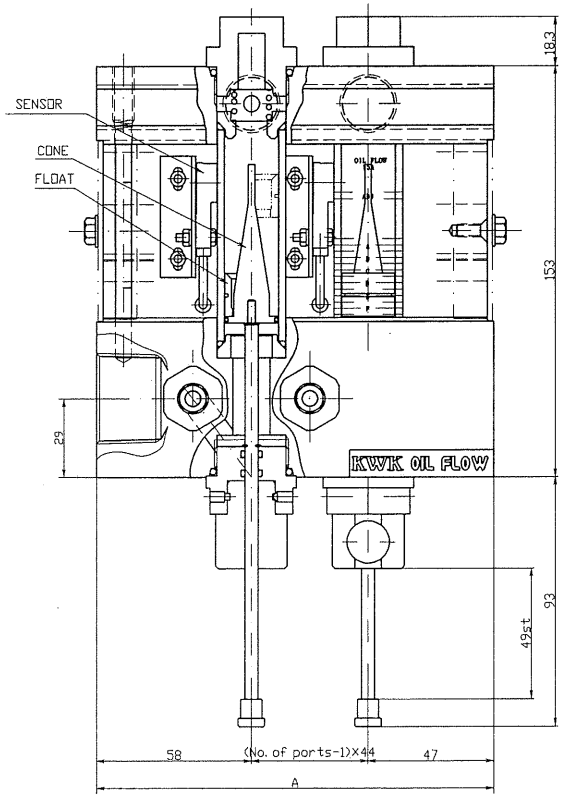

15A

Specification of Switch
Voltage : DC12V to 24V
Lode current : 3 to 100 mA
Use Temperature : -25 to +70℃
(Do not freeze)
Use Humidity : 45 to 85%

CUSTOMER	
SPECIFICATION	
CHECKED BY: Shimono 2010.5.20	DRAWN BY: T. T JAN.26.'01
SEC. CHIEF: Mitsuoka 5.20.'10	DESIGNED BY:

KOF-A-15
OIL FLOW
WITH ALARM SWITCH

KOWA CORP.
OSAKA JAPAN

DWG. No. e-FA-0840 △1
GFD. No.
CODE No.

3RD ANGLE PROJECTION
SCALE 1/1
DATE OF ISSUE
MFG. NO.
(A1)

協議印
出図先
購買
製造
客先
控
指示部数 A1 A3
出図日

KOF10A 流量曲線表

KOF-10 Rating Curve

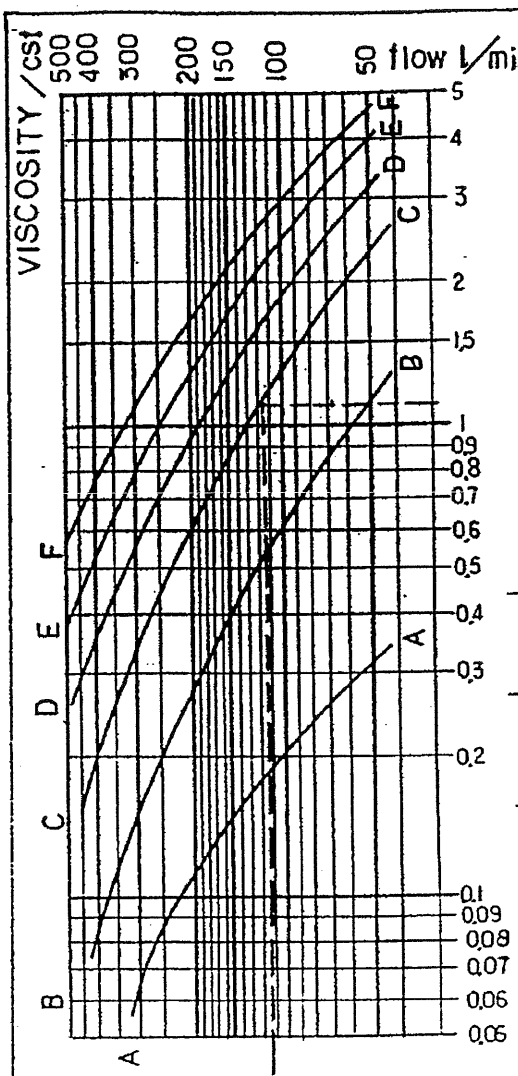

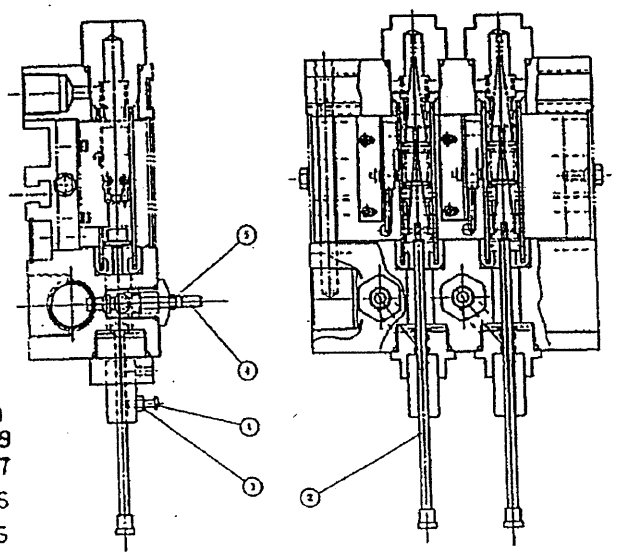

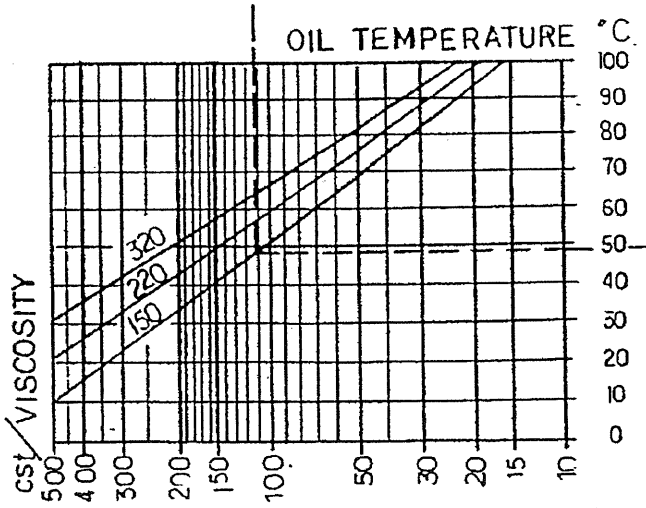

例

- T= 48°C
- OIL = ISO VG 150
- CONE SET AT C-CURVE
- FLOAT MARKER SET BETWEEN ADJ LINES

FLOW 1.1 l/min

KOWA CORP.

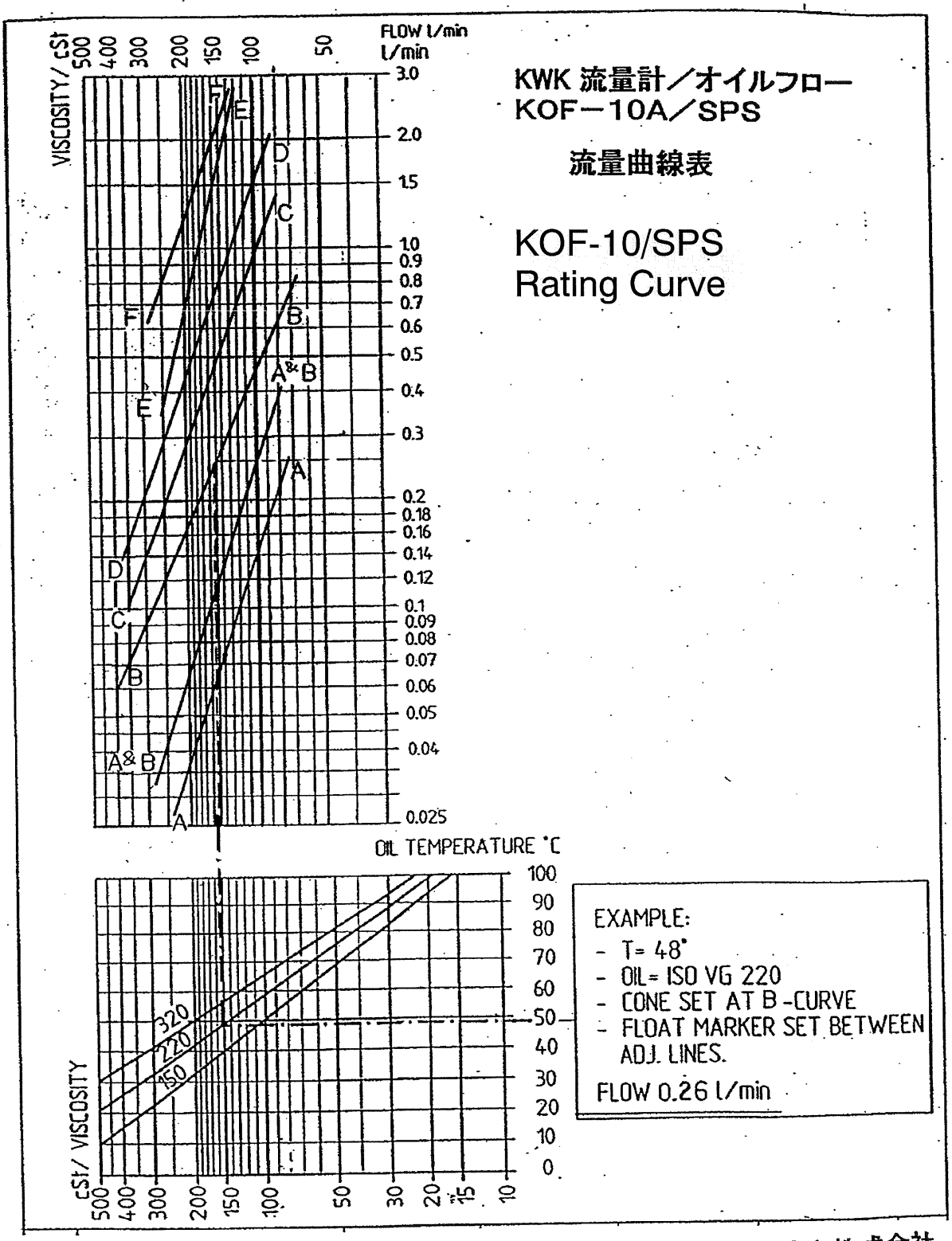
KWK 流量計／オイルフロー
KOF－10A／SPS
流量曲線表
KOF-10/SPS
Rating Curve
VISCOSITY / cSt
500 400 300 200 150 100 50
FLOW l/min
l/min
3.0 2.0 1.5 1.0 0.9 0.8 0.7 0.6 0.5 0.4 0.3 0.2 0.18 0.16 0.14 0.12 0.1 0.09 0.08 0.07 0.06 0.05 0.04 0.025
A B C D E F
A&B
OIL TEMPERATURE °C
100 90 80 70 60 50 40 30 20 10 0
320 220 150
cSt / VISCOSITY
500 400 300 200 150 100 50 30 20 15 10
EXAMPLE:
- T= 48°
- OIL= ISO VG 220
- CONE SET AT B-CURVE
- FLOAT MARKER SET BETWEEN ADJ. LINES.
FLOW 0.26 l/min

広和株式会社

KOF-10U Rating Curve

KWK 流量計/オイルフロー
KOF-10U
流量曲線表

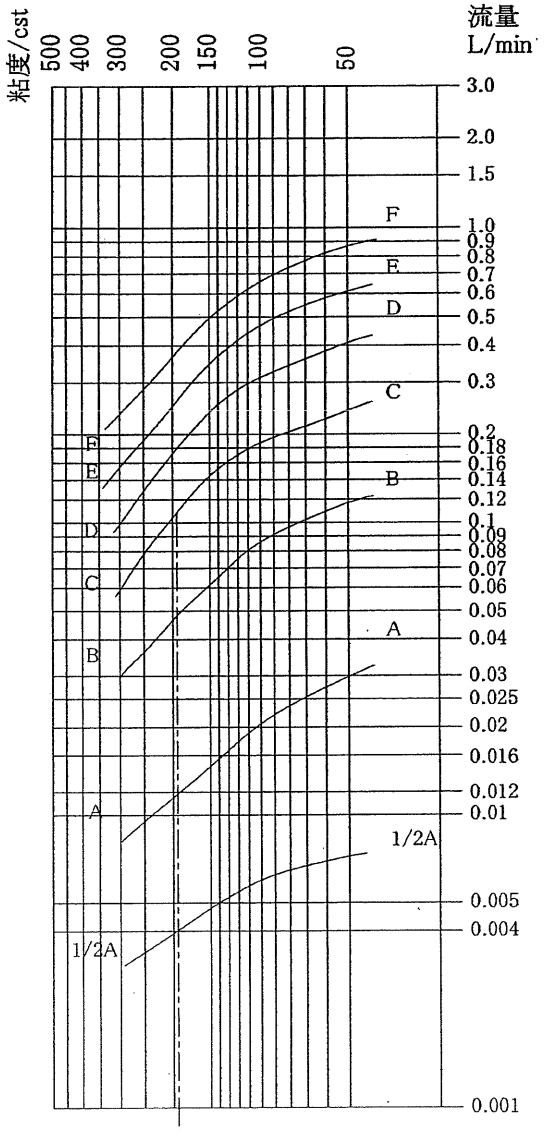

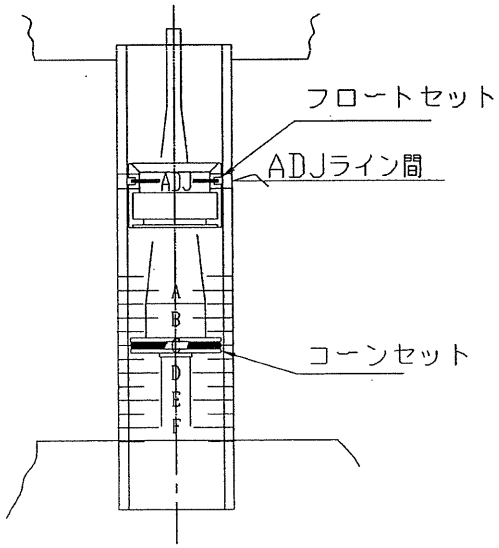

テストオイル
シェルオマラ
(昭和シェル石油㈱製)

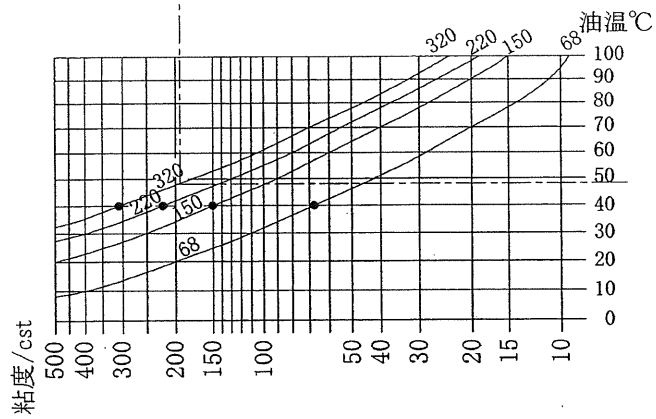

セット例:
油温＝48℃
オイル＝シェルオマラ　#320
コーンセット(白色リング)＝Cライン
フロートセット位置＝ADJ.ライン間
(白色リング)
表より
流量　0.11 L/minを得る。

＊オイル銘柄により若干の変動が有ります。
＊コーンセットBライン以上で使用下さい。
それ以下は不安定領域となり使用できません。

広和株式会社

H21.10.28　作成

KOF15A 流量曲線表

KOF-15 Rating Curve

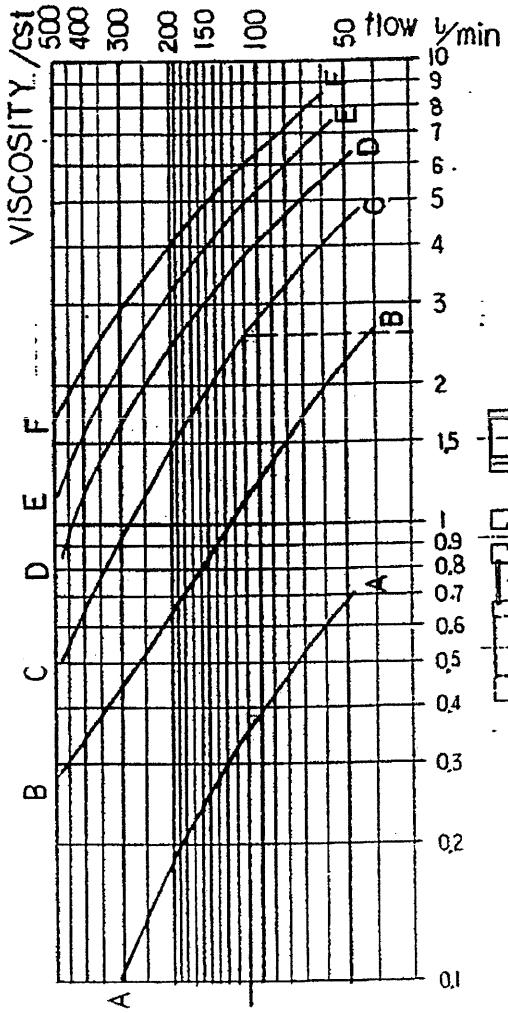

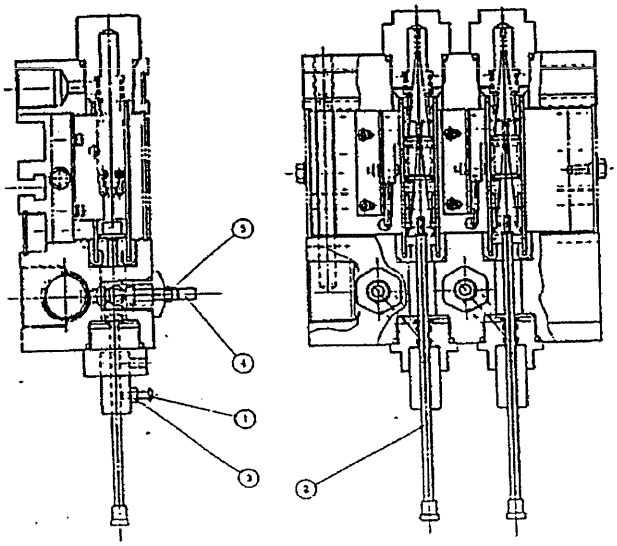

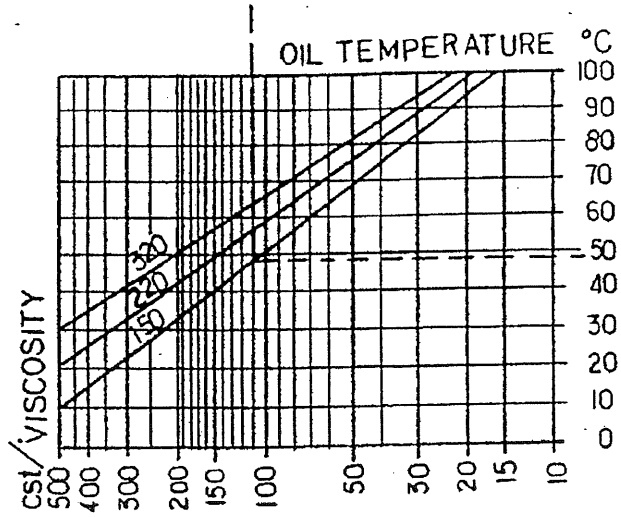

例

- T= 48°C
- OIL = ISO VG·150
- CONE SET AT C- CURVE
- FLOAT MARKER SET BETWEEN ADJ LINES

FLOW 2.6 l/min

KOWA CORP.

REV	改訂内容 DESCRIPTION	年月日 DATE	担当
1	変更	H11.2.1	東田
2	記号スイッチ取付ブラケット変更、他	H11.5.25	東田
3	記号スイッチ取付ビス高さ変更、他	H11.5.29	東田
4	記号スイッチ取付ビス高さ変更、他	H11.8.3	東田
5	10/SPS 機能追加	H13.3.22	東田
6	訂正	H14.4.2	東田
7	KOF-10 専用型とする。リストを変更、他	2010.1.14	宮崎

When the size exists together.
1. KOF-10 : Refer to the drawing e-FA-0835-R7
2. KOF-10/SPS : Refer to the drawing e-SA-KOF10-SPS
3. KOF-15 : Refer to the drawing e-FA-0836R5
4. Number 51 is only for 10/SPS and 10U.

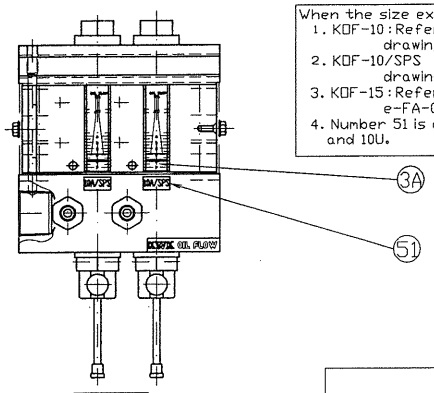

10A/SPS

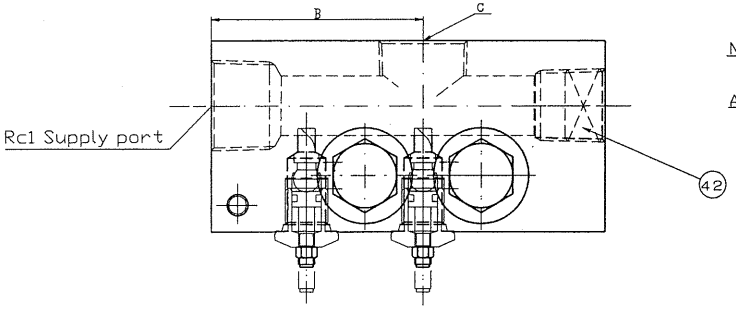

NOTE
1 : THIS DRAWING IS 2 DISCHAGRE PORTS

ATTACHMENT
2.5 HEXAGON SPANNER

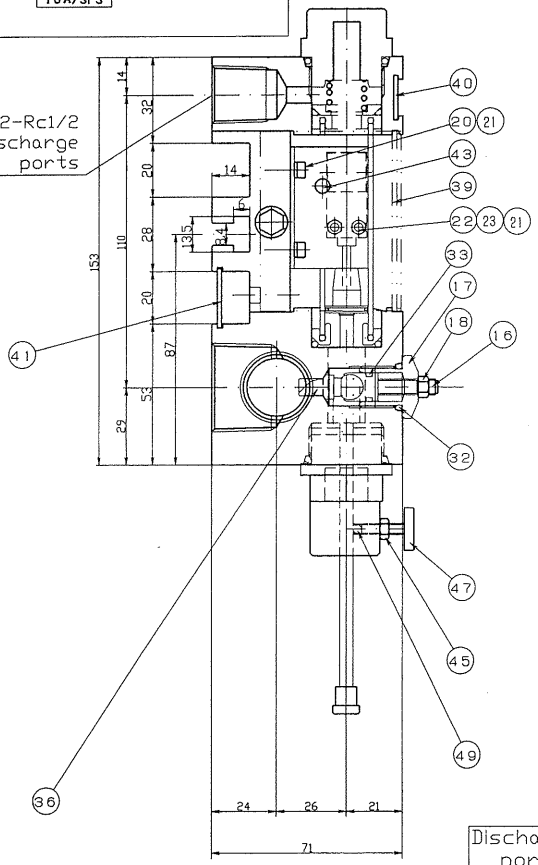

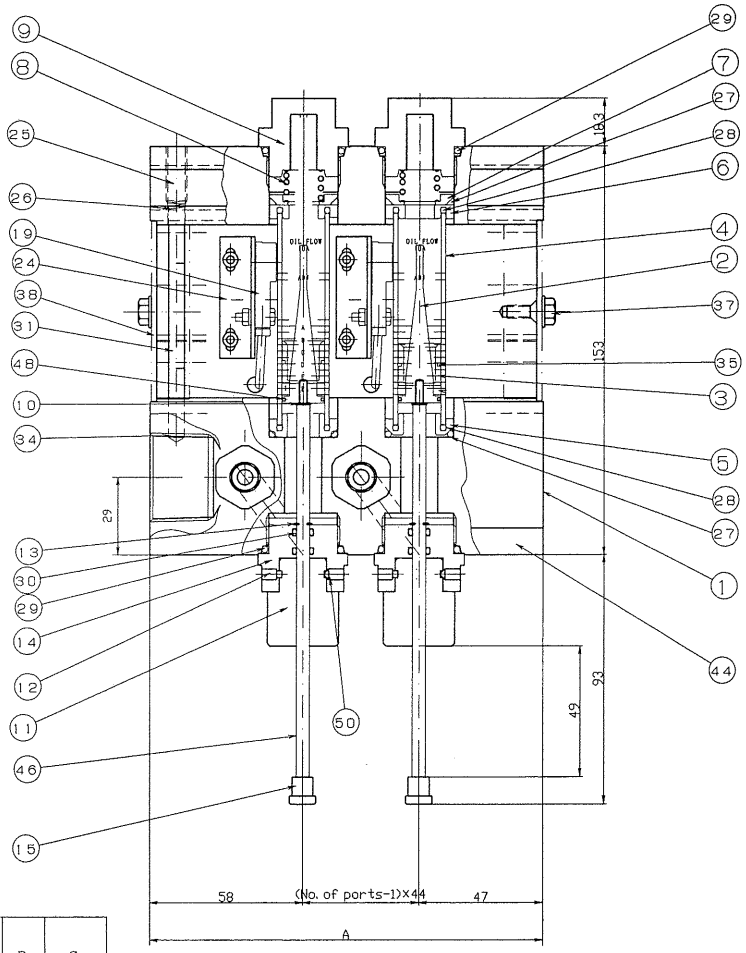

10A

No	Item	Material	Note	Q'ty -02
1	Body	A6063S-T5	FP-1550-R2	1
2	10A Cone	Polyamide resin	FP-1569-R0	2
3	10A Float	SUS303	FP-1488-R3	2
4	10A Glass tube	Hard glass	FP-1451-R2	2
5	10A Tube receiving (under)	A2017	FP-1464-R4	2
6	10A Tube receiving (upper)	A2017	FP-1465-R4	2
7	10A Spring receiving	A2017	PF-1455-R1	2
8	Spring	SUS304-WPA	FP-1463-R1	2
9	Cap	A2017	FP-1566-R0	2
10	Spring Washer	SUS304	M3	2
11	Rod guide B	A2017	FP-1576-R0	2
12	Setscrew with hexagon socket	SUS304	M4×0.7×5L	2
13	E Ring	SUS304	E3	2
14	Rod guide A	A2017	FP-1565-R0	2
15	Knob	A2017	FP-1460-R0	2
16	Valve body	SUS303	FP-1462-R3	2
17	Valve guide	A2017	FP-1486-R1	2
18	Hexagon nut	SUS304	M6×0.75	2
19	Switch	—	GXL-15FLU	2
20	Screw with hexagon socket	SUS304	M3×8L	4
21	Spring Washer	SUS304	M3	8
22	Hexagon bolt	SUS304	M3×10L	4
23	Hexagon nut	SUS304	M3	4
24	Switch clamp	A1100	FP-1551-R5	2
25	Plug with hexagon socket	SUS304	M8×1.25×8L	1
26	Spring	SUS304-WPA	FP-1484-R1	1
27	O Ring	NBR 1A	P22	4
28	O Ring	NBR 1A	P16	4
29	O Ring	NBR 1A	P26	4
30	O Ring	NBR 1A	S5	4
31	Thermometer	—	KS-804337	1
32	O Ring	NBR 1A	P14	2
33	O Ring	NBR 1A	P8	2
34	O Ring	NBR 1A	P4(購入品)	1
35	Teflon ring for 10A	Teflon	FP-1492-R0	2
36	Valve	Polyamide resin	FP-1485-R1	2
37	Hex-head bolt with flange	SS(Galvanizing)	M5×0.8×8L	2
38	Side cover	Polycarbonate	FP-1552-R1	2
39	Cover	Polycarbonate	FP-1553-39-R0	1
40	Name plate refueling ahead	Plastic	FP-1553-40-R0	1
41	Cover for wire	A1050	FP-1553-41-R0	1
42	Plug with hexagon socket	SS(Galvanizing)	R3/4	1
43	screw with cross recess	Nylon	M3×0.5×8L	2
44	Name plate	A1050	FT-1318-R0	1
45	Hexagon nut	SUS304	M4	2
46	10A、15A Rod	SUS303	FP-1567-R1	2
47	Knob bolt	SUS303	M4×0.7×16L	2
48	O Ring	Viton 4D (W)	S12.5	2
49	Nylon boll	Nylon	1/8	2
50	Setscrew with hexagon socket	SUS304	M4×0.75×5L	2
51	Size name plate (for 10/SPS、10U)	A1050	only for 10/SPS and 10U	2
52	-	-	-	-

Discharge port	A	B	C
1	105	58	Rc1/2
→ 2	149	80	Rc1
4	237	124	Rc1
6	325	168	Rc1
8	413	212	Rc1
10	501	256	Rc1

Specification of Switch
Voltage : DC12V to 24V
Lode current : 3 to 100 mA
Use Temperature : -25 to +70℃
(Do not freeze)
Use Humidity : 45 to 85%

CUSTOMER
SPECIFICATION

CHECKED BY	DRAWN BY
Shimano 2010.5.20	T.T H11.1.25
APPROVED BY	DESIGNED BY
Fujizaki 2010.5.20	T.T H11.1.25

KOF-(A)-10
OIL FLOW
Assembly Drawing

KOWA CORP.
OSAKA JAPAN

DWG.No. e-FA-0835 7
CFD.No.
CODE No.
3RD ANGLE PROJECTION
SCALE
DATE OF ISSUE
MFG. NO.

協議中
出図先
購買
製造
客先
校
複写部数 A1 A3
出図日

REV	改訂内容 DESCRIPTION	BY	DATE	CHECK
△				
△				
△				
△				

When the size exists together.
1. KOF-10 : Refer to the drawing e-FA-0835-R7
2. KOF-10/SPS : Refer to the drawing e-SA-KOF10-SPS
3. KOF-15 : Refer to the drawing e-FA-0836R5
4. Number 51 is only for 10/SPS and 10U.

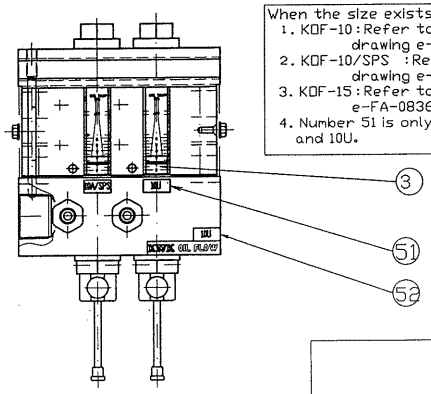

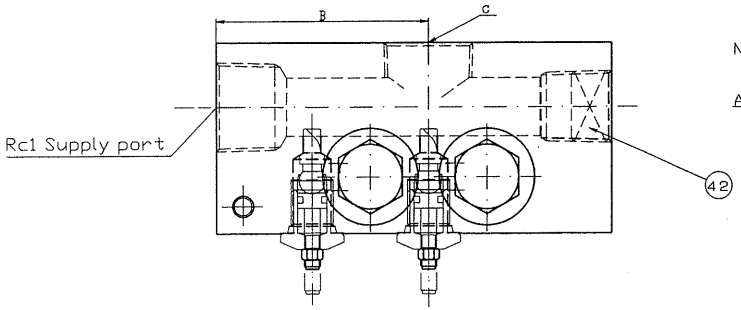

NOTE
1 : THIS DRAWING IS 2 DISCHAGRE PORTS

ATTACHMENT
2.5 HEXAGON SPANNER

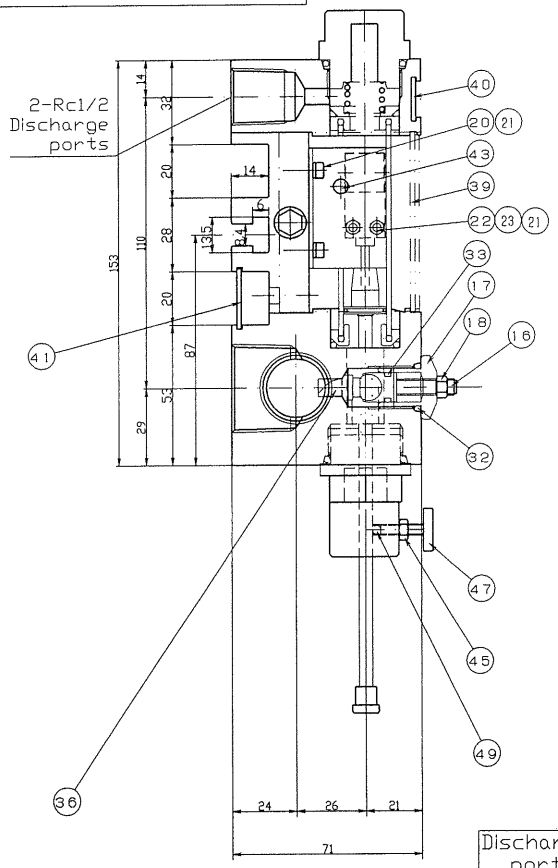

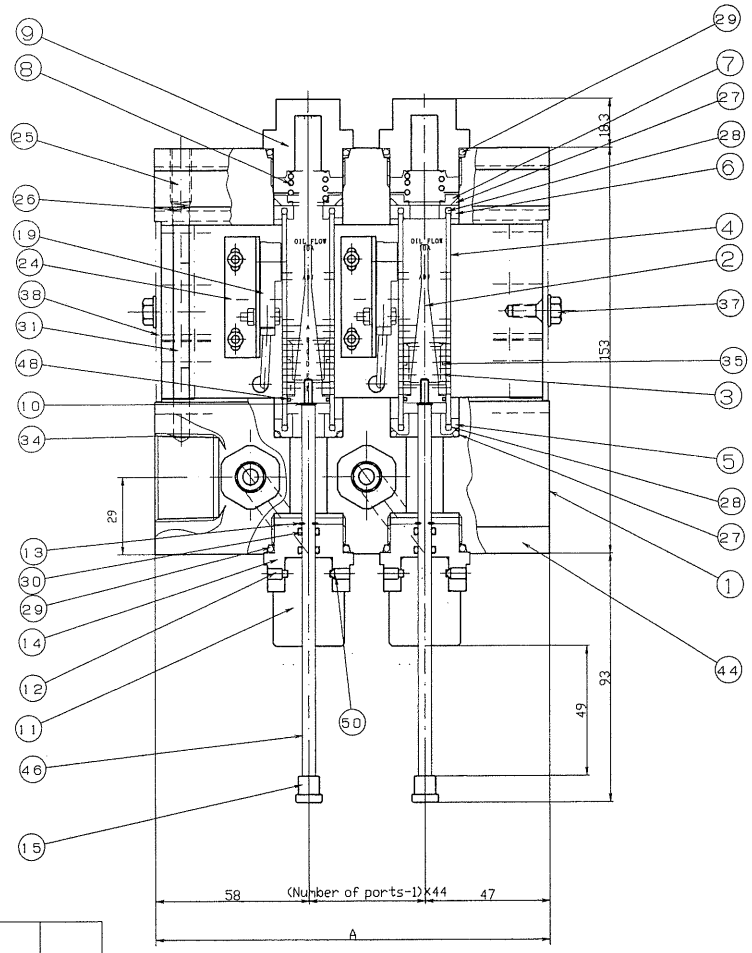

No	Item	Material	Note	Q'ty -02
1	Body	A6063S-T5	FP-1550-R2	1
2	10U Cone	A2017	KOF-10U-CORN-R0	2
3	10U Float	SUS303	KOF-10U-FLOAT-R1	2
4	10A Glass tube	Hard glass	FP-1451-R2	2
5	10A Tube receiving (under)	A2017	FP-1464-R4	2
6	10A Tube receiving (upper)	A2017	FP-1465-R4	2
7	10A Spring receiving	A2017	PF-1455-R1	2
8	Spring	SUS304-WPA	FP-1463-R1	2
9	Cap	A2017	FP-1566-R0	2
10	Spring Washer	SUS304	M3	2
11	Rod guide B	A2017	FP-1576-R0	2
12	Setscrew with hexagon socket	SUS304	M4×0.7×5L	2
13	E Ring	SUS304	E3	2
14	Rod guide A	A2017	FP-1565-R0	2
15	Knob	A2017	FP-1460-R0	2
16	Valve body	SUS303	FP-1462-R3	2
17	Valve guide	A2017	FP-1486-R1	2
18	Hexagon nut	SUS304	M6×0.75	2
19	Switch	—	GXL-15FLU	2
20	Screw with hexagon socket	SUS304	M3×8L	4
21	Spring Washer	SUS304	M3	8
22	Hexagon bolt	SUS304	M3×10L	4
23	Hexagon nut	SUS304	M3	4
24	Switch clamp	A5052P	FP-1551-R5	2
25	Plug with hexagon socket	SUS304	M8×1.25×8L	1
26	Spring	SUS304-WPA	FP-1484-R1	1
27	O Ring	NBR 1A	P22	4
28	O Ring	NBR 1A	P16	4
29	O Ring	NBR 1A	P26	4
30	O Ring	NBR 1A	S5	4
31	Thermometer	—	KS-804337	1
32	O Ring	NBR 1A	P14	2
33	O Ring	NBR 1A	P8	2
34	O Ring	NBR 1A	P4	1
35	Teflon ring for 10A	Teflon	FP-1492-R0	2
36	Valve	Polyamide resin	FP-1485-R1	2
37	Hex-head bolt with flange	SS(Galvanizing)	M5×0.8×8L	2
38	Side cover	Polycarbonate	FP-1552-R1	2
39	Cover	Polycarbonate	FT-1553-39-R0	1
40	Name plate refueling ahead	Plastic	FT-1553-40-R0	1
41	Cover for wire	A1050	FT-1553-41-R0	1
42	Plug with hexagon socket	SS(Galvanizing)	R3/4	1
43	screw with cross recess	Nylon	M3×0.5×8L	2
44	Name plate	A1050	FT-1318-R0	1
45	Hexagon nut	SUS304	M4	2
46	10A, 15A Rod	SUS303	FP-1567-R1	2
47	Knob bolt	SUS303	M4×0.7×16L	2
48	O Ring	Viton 4D (W)	S12.5	2
49	Nylon ball	Nylon	1/8	2
50	Setscrew with hexagon socket	SUS304	M4×0.75×5L	2
51	Size name plate (for 10/SPS, 10U)	A1050	only for 10/SPS and 10U	2
52	Size name plate (for 10U)	A1050	KOF-10U-MEIBAN	1

Specification of Switch
Voltage : DC12V to 24V
Lode current : 3 to 100 mA
Use Temperature : -25 to +70℃
(Do not freeze)
Use Humidity : 45 to 85%

Discharge port	A	B	C
1	105	58	Rc1/2
2	149	80	Rc1
4	237	124	Rc1
6	325	168	Rc1
8	413	212	Rc1
10	501	256	Rc1

CUSTOMER
SPECIFICATION

CHECKED BY	DRAWN BY
Shimomura 2010.5.20	勝取 2010.1.13
APPROVED BY	DESIGNED BY
宮崎 2010.5.20	宮崎 2010.1.13

KOF-(A)-10U Assembly drawing

KOWA CORP.
OSAKA JAPAN

DWG.No. e-SA-KOF10U △0
CFD.No.
CODE No.
3RD ANGLE PROJECTION
SCALE
DATE OF ISSUE
MFG. NO.

協議印
出図先
購買
製造
客先
控
複写部数 A1 A3
出図日

REV	改訂内容 DESCRIPTION	DATE	DESIGN
1	FA-0835-R6から変更し、寸法変更とする。	2010.1.14	宮崎
2			
3			
4			
5			
6			
7			

When the size exists together.
1. KOF-10 : Refer to the drawing e-FA-0835-R7
2. KOF-10/SPS : Refer to the drawing e-SA-KOF10-SPS
3. KOF-15 : Refer to the drawing e-FA-0836R5
4. Number 51 is only for 10/SPS and 10U.

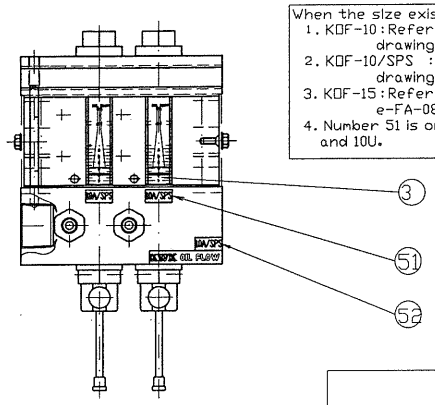

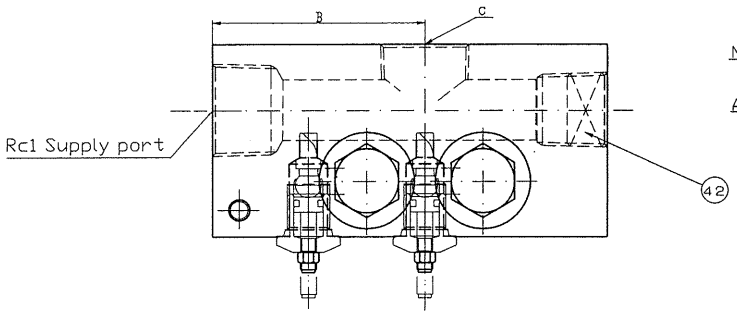

NOTE
1 : THIS DRAWING IS 2 DISCHAGRE PORTS

ATTACHMENT
2.5 HEXAGON SPANNER

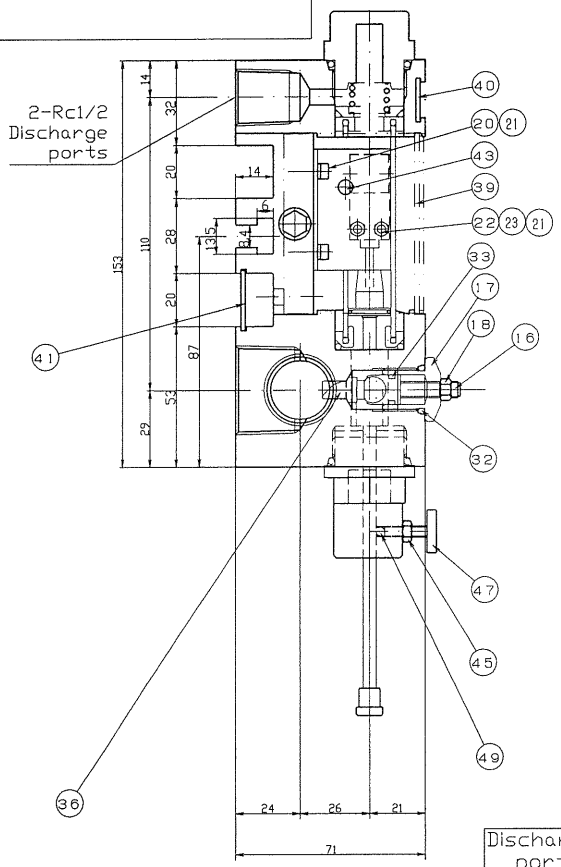

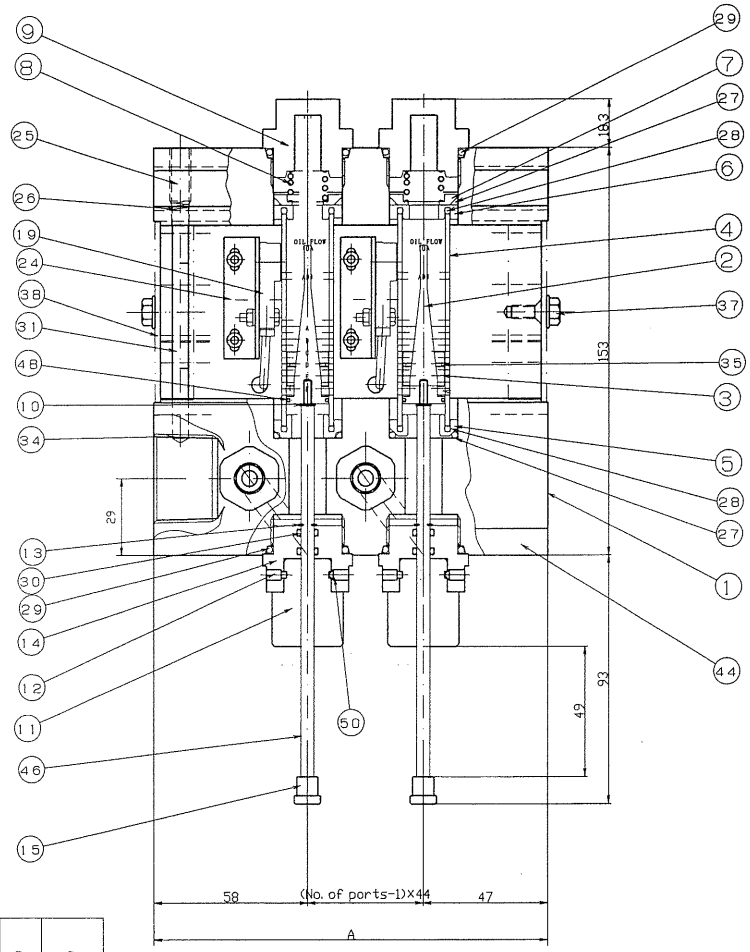

10/SPS

No	Item	Material	Note	Q'ty -02
1	Body	A6063S-T5	FP-1550-R2	1
2	10A Cone	Polyamide resin	FP-1569-R0	2
3	10/SPS Float	SUS303	FP-1488-R3	2
4	10A Glass tube	Hard glass	FP-1451-R2	2
5	10A Tube receiving (under)	A2017	FP-1464-R4	2
6	10A Tube receiving (upper)	A2017	FP-1465-R4	2
7	10A Spring receiving	A2017	PF-1455-R1	2
8	Spring	SUS304-WPA	FP-1463-R1	2
9	Cap	A2017	FP-1566-R0	2
10	Spring Washer	SUS304	M3	2
11	Rod guide B	A2017	FP-1576-R0	2
12	Setscrew with hexagon socket	SUS304	M4×0.7×5L	2
13	E Ring	SUS304	E3	2
14	Rod guide A	A2017	FP-1565-R0	2
15	Knob	A2017	FP-1460-R0	2
16	Valve body	SUS303	FP-1462-R3	2
17	Valve guide	A2017	FP-1486-R1	2
18	Hexagon nut	SUS304	M6×0.75	2
19	Switch	—	GXL-15FLU	2
20	Screw with hexagon socket	SUS304	M3×8L	4
21	Spring Washer	SUS304	M3	8
22	Hexagon bolt	SUS304	M3×10L	4
23	Hexagon nut	SUS304	M3	4
24	Switch clamp	A1100	FP-1551-R5	2
25	Plug with hexagon socket	SUS304	M8×1.25×8L	1
26	Spring	SUS304-WPA	FP-1484-R1	1
27	O Ring	NBR 1A	P22	4
28	O Ring	NBR 1A	P16	4
29	O Ring	NBR 1A	P26	4
30	O Ring	NBR 1A	S5	4
31	Thermometer	—	KS-804337	1
32	O Ring	NBR 1A	P14	2
33	O Ring	NBR 1A	P8	2
34	O Ring	NBR 1A	P4	1
35	Teflon ring for 10A	Teflon	FP-1492-R0	2
36	Valve	Polyamide resin	FP-1485-R1	2
37	Hex-head bolt with flange	SS(Galvanizing)	M5×0.8×8L	2
38	Side cover	Polycarbonate	FP-1552-R1	2
39	Cover	Polycarbonate	FP-1553-39-R0	1
40	Name plate refueling ahead	Plastic	FP-1553-40-R0	1
41	Cover for wire	A1050	FP-1553-41-R0	1
42	Plug with hexagon socket	SS(Galvanizing)	R3/4	1
43	screw with cross recess	Nylon	M3×0.5×8L	2
44	Name plate	A1050	FT-1318-R0	1
45	Hexagon nut	SUS304	M4	2
46	10A、15A Rod	SUS303	FP-1567-R1	2
47	Knob bolt	SUS303	M4×0.7×16L	2
48	O Ring	Viton 4D (W)	S12.5	2
49	Nylon boll	Nylon	1/8	2
50	Setscrew with hexagon socket	SUS304	M4×0.75×5L	2
51	Size name plate (for 10/SPS、10U)	A1050	only for 10/SPS and 10U	2
52	Size name plate (for 10/sps)	A1050	KS-804544-R1	1

Discharge port	A	B	C
1	105	58	Rc1/2
→ 2	149	80	Rc1
4	237	124	Rc1
6	325	168	Rc1
8	413	212	Rc1
10	501	256	Rc1

Specification of Switch
Voltage : DC12V to 24V
Lode current : 3 to 100 mA
Use Temperature : -25 to +70℃ (Do not freeze)
Use Humidity : 45 to 85%

CUSTOMER
SPECIFICATION

CHECKED BY	DRAWN BY
Shimono 2010.5.20	T.T 2010.1.14
APPROVED BY	DESIGNED BY
Hirata 5.20.10	T.T H11.1.25

KOF-(A)-10/SPS
OIL FLOW
Assembly drawing

KOWA CORP.
OSAKA JAPAN

DWG.No. e-SA-KOF10-SPS 0
CFD.No.
CODE No.

3RD ANGLE PROJECTION
SCALE
DATE OF ISSUE
MFG. NO.

協議印
出図先
購買
製造
客先
校
複写部数 A1 A3
出図日

REV	改訂内容 DESCRIPTION	年月日 DATE	担当 ASSIGN
A	新規	H11.2.1	末田
B	近接スイッチ用付台追加、他	H11.5.25	末田
C	近接スイッチ用付台ビス長さ変更	H11.5.28	末田
D	近接スイッチ用付台ビス長さ変更、他	H11.8.3	末田
E	リスト変更、他	2010.1.14	末田
F			

Specification of Switch

Voltage : DC12V to 24V

Lode current : 3 to 100 mA

Use Temperature : -25 to +70℃ (Do not freeze)

Use Humidity : 45 to 85%

Discharge port	A	B	C
1	105	58	Rc1/2
→ 2	149	80	Rc1
4	237	124	Rc1
6	325	168	Rc1
8	413	212	Rc1
10	501	256	Rc1

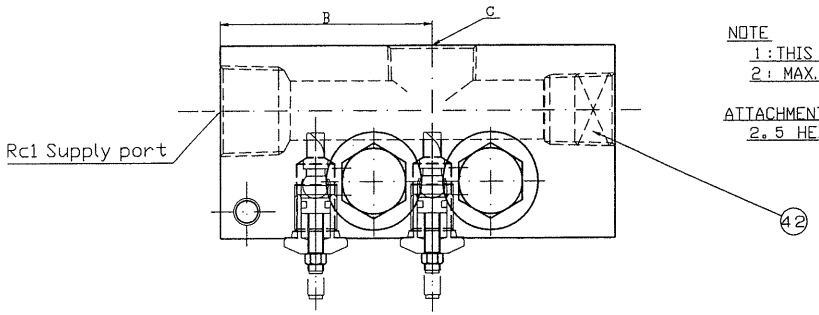

NOTE

1 : THIS DRAWING 2 DISCHARGE PORTS

2 : MAX. PRESSURE 1MPa

ATTACHMENT

2.5 HEXAGON SPANNER

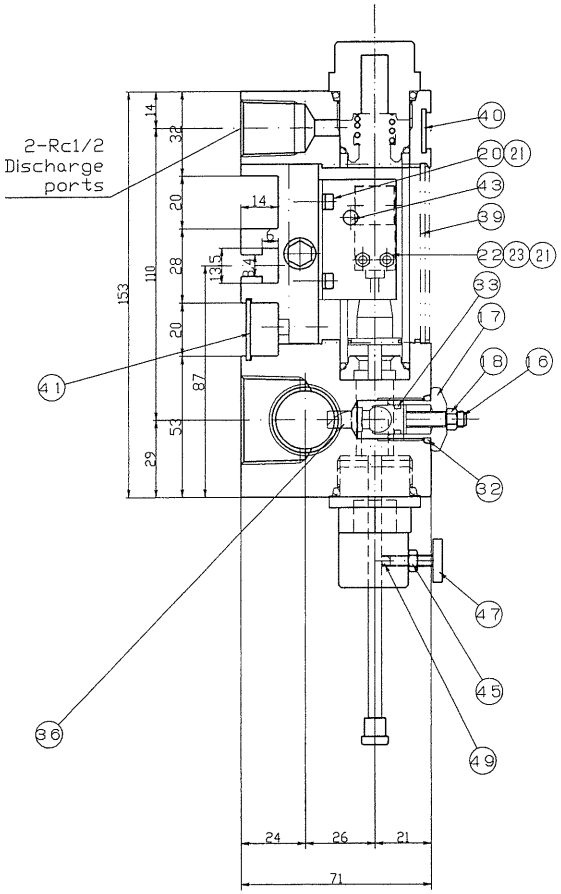

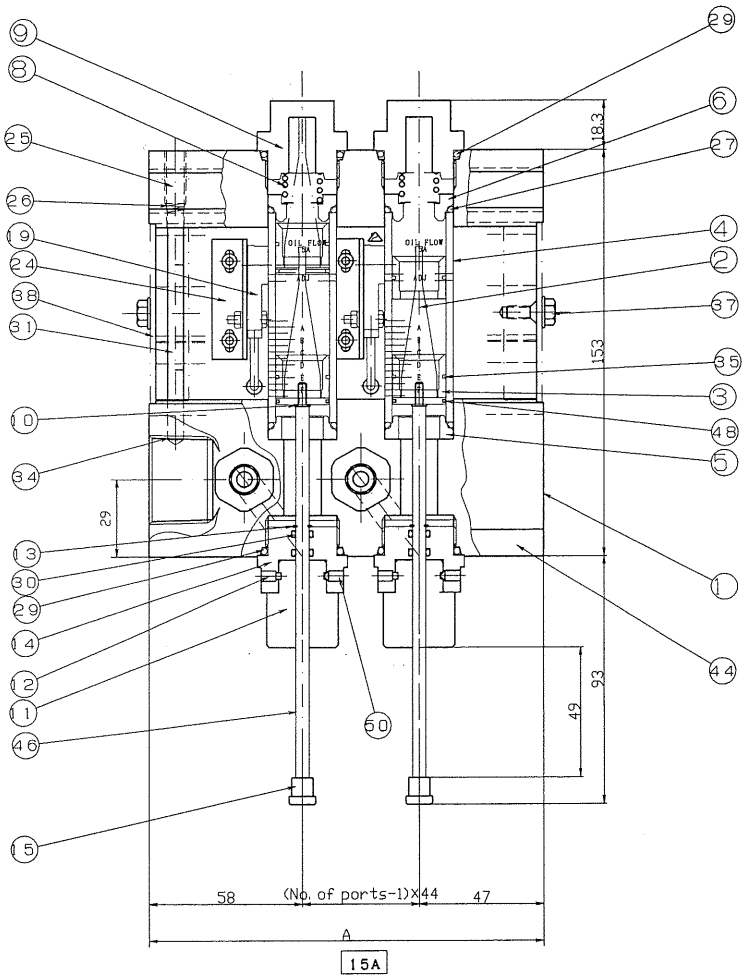

No	Item	Material	Note	Q'ty -02
1	Body	A6063S-T5	FP-1550-R2	1
2	15A Cone	Polyamide resin	FP-1570-R0	2
3	15A Float	SUS303	FP-1490-R1	2
4	15A Glass tube	Hard glass	FP-1451-R2	2
5	15A Tube receiving (under)	A2017	FP-1577-R0	2
6	15A Tube receiving (upper)	A2017	FP-1456-R2	2
7	–	–	–	–
8	Spring	SUS304-WPA	FP-1463-R1	2
9	Cap	A2017	FP-1566-R0	2
10	Spring Washer	SUS304	M3	2
11	Rod guide B	A2017	FP-1576-R0	2
12	Setscrew with hexagon socket	SUS304	M4×0.7×5L	2
13	E Ring	SUS304	E3	2
14	Rod guide A	A2017	FP-1565-R0	2
15	Knob	A2017	FP-1460-R0	2
16	Valve body	SUS303	FP-1462-R3	2
17	Valve guide	A2017	FP-1486-R1	2
18	Hexagon nut	SUS304	M6×0.75	2
19	Switch	—	GXL-15FLU	2
20	Screw with hexagon socket	SUS304	M3×7L	4
21	Spring Washer	SUS304	M3	8
22	Hexagon bolt	SUS304	M3×10L	4
23	Hexagon nut	SUS304	M3	4
24	Switch clamp	A5052P	FP-1551-R5	2
25	Plug with hexagon socket	SUS304	M8×1.25×8L	1
26	Spring	SUS304-WPA	FP-1484-R1	1
27	O Ring	NBR 1A	P22	4
28	–	–	–	–
29	O Ring	NBR 1A	P26	4
30	O Ring	NBR 1A	S5	4
31	Thermometer	—	KS-804337	1
32	O Ring	NBR 1A	P14	2
33	O Ring	NBR 1A	P8	2
34	O Ring	NBR 1A	P4	1
35	Teflon ring for 15A	Teflon	FP-1493-R0	2
36	Valve	Polyamide resin	FP-1485-R1	2
37	Hex-head bolt with flange	SS(Galvanizing)	M5×0.8×8L	2
38	Side cover	Polycarbonate	FP-1552-R1	2
39	Cover	Polycarbonate	FT-1553-39-R0	1
40	Name plate refueling ahead	Plastic	FT-1553-40-R0	1
41	Cover for wire	A1050	FT-1553-41-R0	1
42	Plug with hexagon socket	SS(Galvanizing)	R3/4	1
43	screw with cross recess	Nylon	M3×0.5×8L	2
44	Name plate	A1050	FT-1318-R0	1
45	Hexagon nut	SUS304	M4	2
46	10A、15A Rod	SUS303	FP-1567-R1	2
47	Knob bolt	SUS303	M4×0.7×16L	2
48	O Ring	Viton 4D (W)	S16	2
49	Nylon boll	Nylon	1/8	2
50	Setscrew with hexagon socket	SUS304	M4×0.75×5L	2
51	–	–	–	–
52	–	–	–	–

CUSTOMER

SPECIFICATION

CHECKED BY	DRAWN BY
2010.5.20	T.T H11.1.27
APPROVED BY	DESIGNED BY
2010.5.20	T.T H11.1.27

KOWA CORP.
OSAKA JAPAN

KOF-(A)-15
OIL FLOW
Assembly Drawing

DWG.No. e-FA-0836 5

CFD.No.

CODE No.

3RD ANGLE PROJECTION

SCALE

DATE OF ISSUE

MFG. NO.

協議印

出図先

購買

製造

客先

控

複写部数 A1 A3

出図日

改REV	改定内容 DISCRIPTION	日付 DATE	担当SIGN
1	No.48 材質変更		
2			
3			
4			

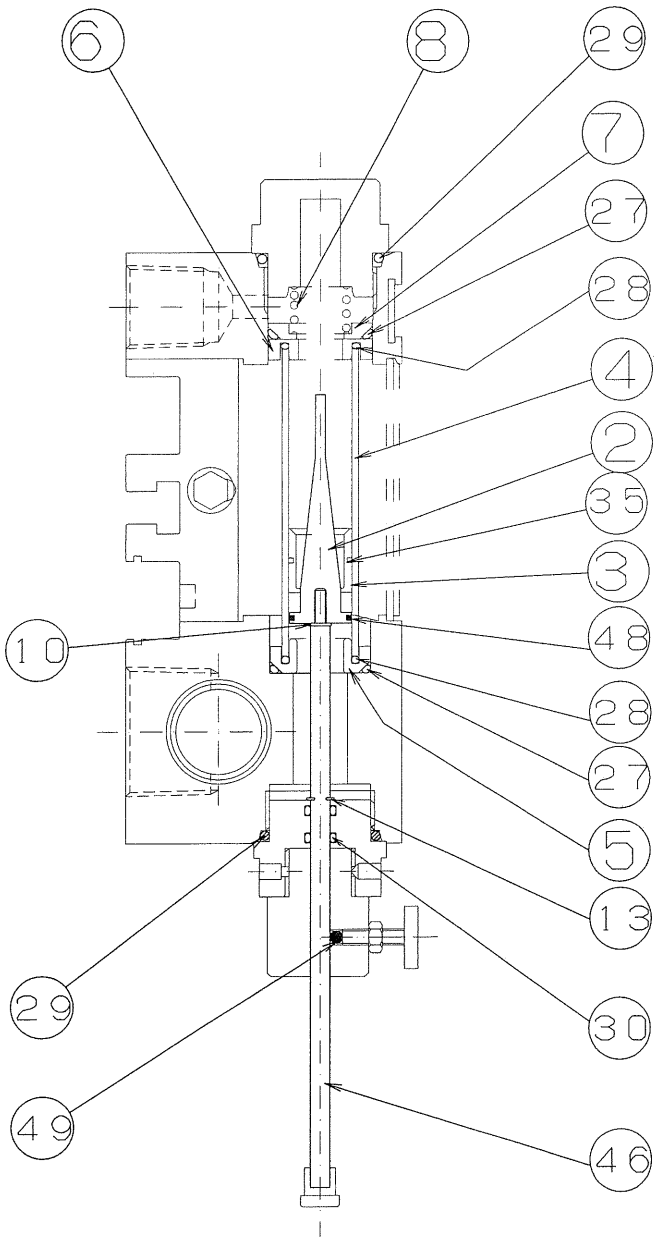

No	Item	Material	Q'ty
2	10A Cone	Polyamide resin	1
3	10A Float	SUS303	1
4	10A Glass tube	Hard glass	1
5	10A Tube receiving (under)	A2017	1
6	10A Tube receiving (upper)	A2017	1
7	10A Spring receiving	A2017	1
8	Spring	SUS304-WPA	1
10	Spring Washer	SUS304	1
13	E Ring	SUS304	1
27	O Ring	NBR 1A	2
28	O Ring	NBR 1A	2
29	O Ring	NBR 1A	2
30	O Ring	NBR 1A	2
35	Teflon ring for 10A	Teflon	1
46	10A、15A Rod	SUS303	1
48	O Ring	Viton 4D (W)	1
49	Nylon boll	Nylon	1

CUSTOMER
SPECIFICATION

CHECKED BY	DRAWN BY
Shimomo 2010.5.31	M. S H12.4.14
APPROVED BY	DESIGNED BY
Miyazaki 5.31.10	高田 H12.4.14

KOF-10
KIT-1

KOWA CORP.
OSAKA JAPAN

DWG.No. e-KOF10-KIT1 1
CFD.No.
CODE No.
3RD ANGLE PROJECTION
SCALE
DATE OF ISSUE
MFG.No.

協議印
出図先
購買
製造
客先
控
複写部数
A3
出図日

(A3)

改REV	改定内容 DISCRIPTION	日付 DATE	担SIGN
△			
△			
△			
△			

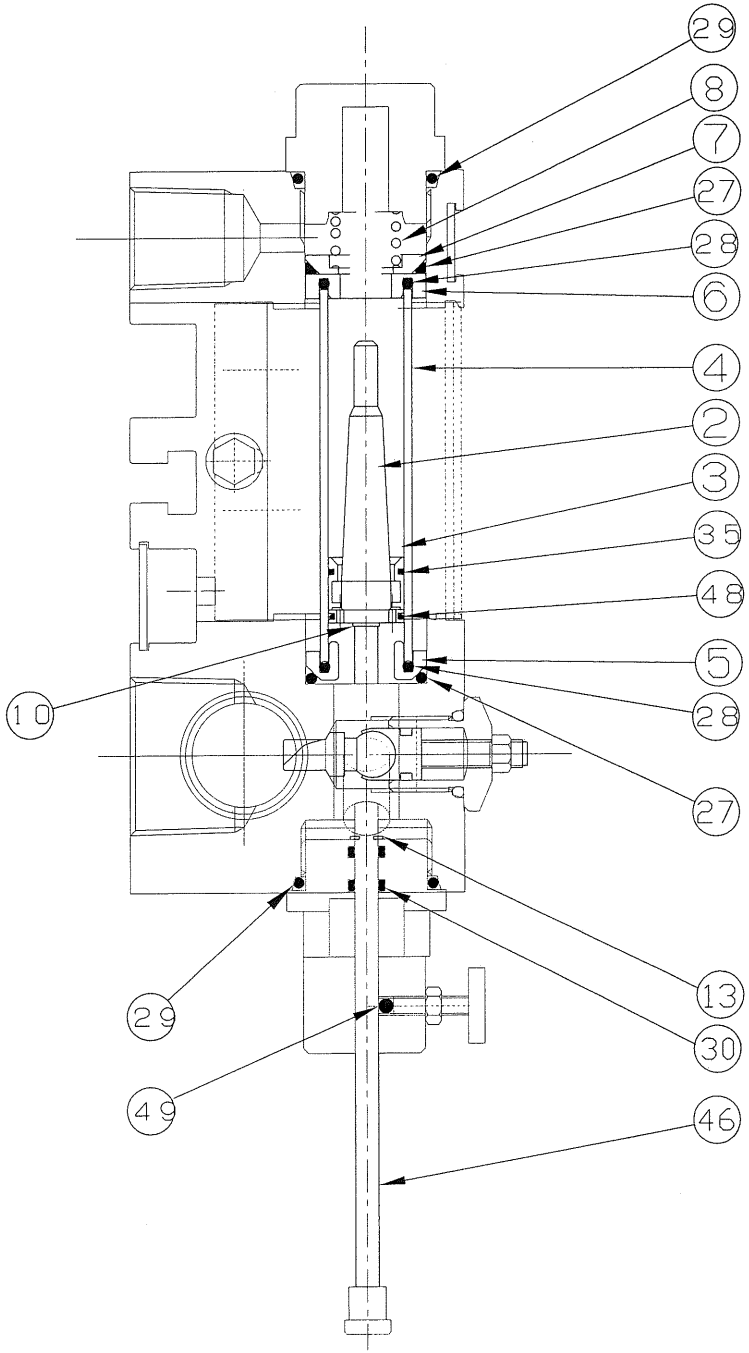

No	Item	Material	Q'ty
2	10U Cone	A2017	1
3	10U Float	SUS303	1
4	10A Glass tube	Hard glass	1
5	10A Tube receiving (under)	A2017	1
6	10A Tube receiving (upper)	A2017	1
7	10A Spring receiving	A2017	1
8	Spring	SUS304-WPA	1
10	Spring Washer	SUS304	1
13	E Ring	SUS304	1
27	O Ring	NBR 1A	2
28	O Ring	NBR 1A	2
29	O Ring	NBR 1A	2
30	O Ring	NBR 1A	2
35	Teflon ring for 10A	Teflon	1
46	10A、15A Rod	SUS303	1
48	O Ring	VITON 4D (W)	1
49	Nylon boll	Nylon	1

CUSTOMER

SPECIFICATION

CHECKED BY	DRAWN BY
Shimomu 2010 5.31	勝取 2010.1.14
APPROVED BY	DESIGNED BY
Miyazaki 5.31'10	宮崎 2010.1.14

KOF-10U
KIT-1

KOWA CORP.
OSAKA JAPAN

DWG.No. e-KOF10U-KIT1 △0

CFD.No.

CODE No.

3RD ANGLE PROJECTION

SCALE

DATE OF ISSUE

MFG.No.

協議印

出図先

購買

製造

客先

控

複写部数

A3

出図日

(A3)

改訂REV	改定内容 DISCRIPTION	日付 DATE	担当SIGN
△			
△			
△			
△			

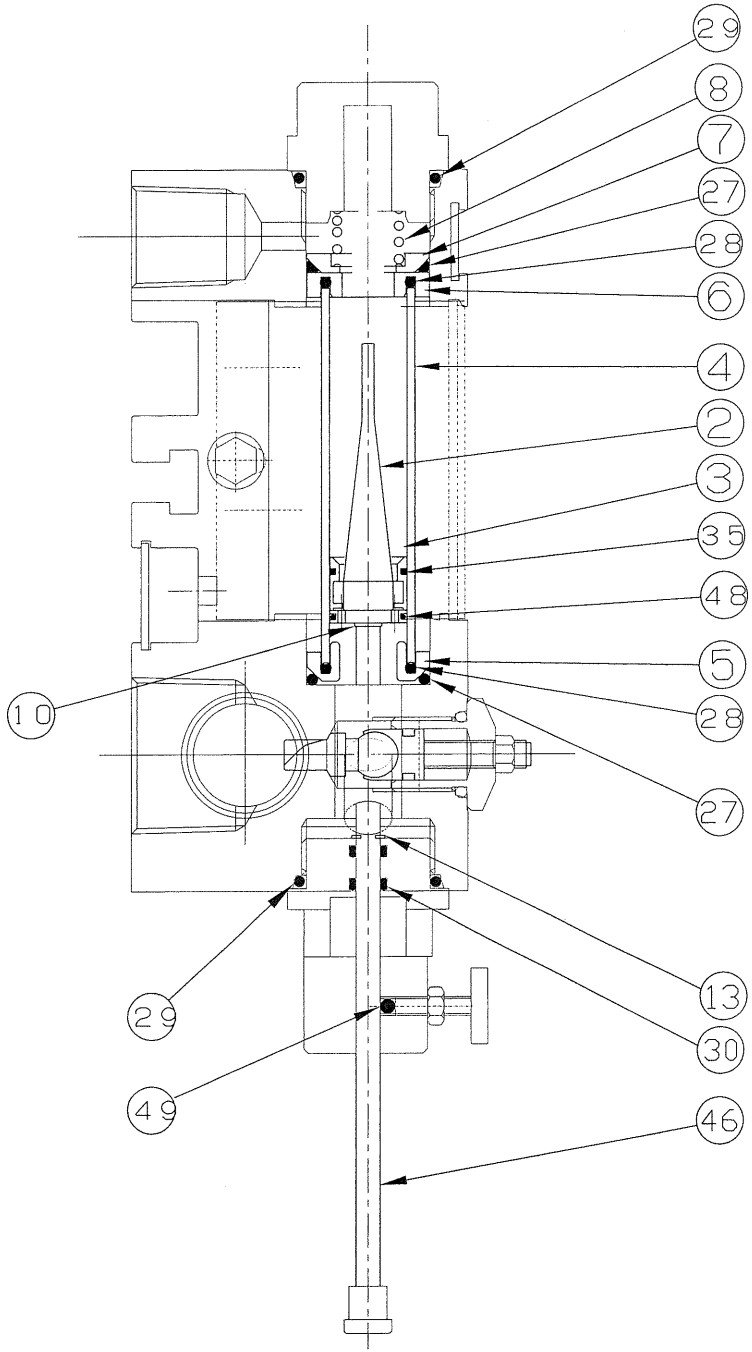

No	Item	Material	Q'ty
2	10A Cone	Polyamide resin	1
3	10/SPS Float	SUS303	1
4	10A Glass tube	Hard glass	1
5	10A Tube receiving (under)	A2017	1
6	10A Tube receiving (upper)	A2017	1
7	10A Spring receiving	A2017	1
8	Spring	SUS304-WPA	1
10	Spring Washer	SUS304	1
13	E Ring	SUS304	1
27	O Ring	NBR 1A	2
28	O Ring	NBR 1A	2
29	O Ring	NBR 1A	2
30	O Ring	NBR 1A	2
35	Teflon ring for 10A	Teflon	1
46	10A、15A Rod	SUS303	1
48	O Ring	Viton 4D (W)	1
49	Nylon boll	Nylon	1

CUSTOMER

SPECIFICATION

CHECKED BY	DRAWN BY
Shimano 2010.5.31	勝取 2010.1.14
APPROVED BY	DESIGNED BY
Miyazaki 5.31'10	宮崎 2010.1.14

KOF-10/SPS
KIT-1

KOWA CORP.
OSAKA JAPAN

DWG.No. e-KOF10-SPS-KIT1 △0

CFD.No.

CODE No.

3RD ANGLE PROJECTION

SCALE

DATE OF ISSUE

MFG.No.

協議印

出図先

購買

製造

客先

控

複写部数

A3

出図日

(A3)

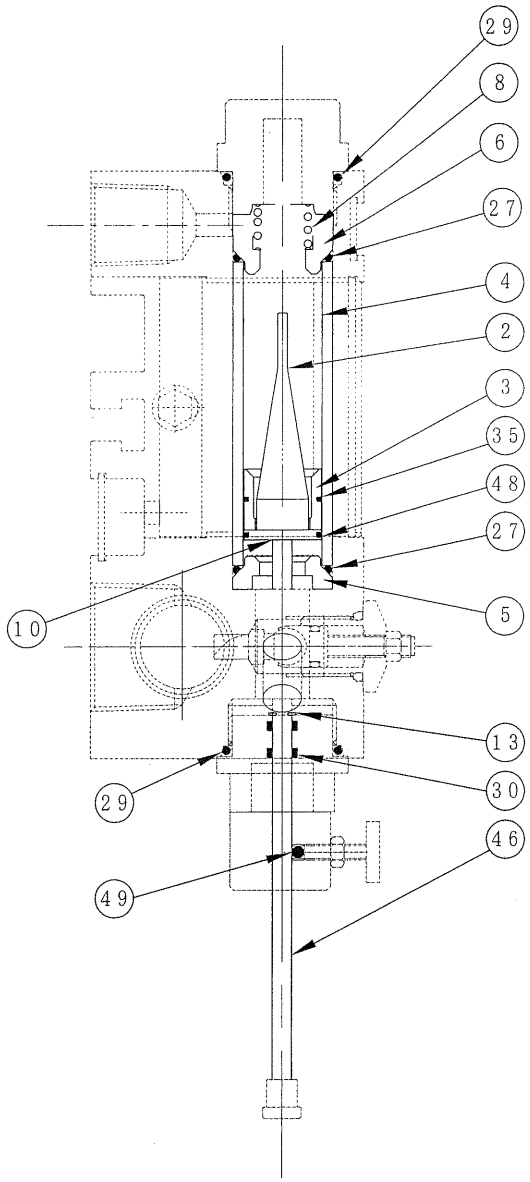

No	Item	Material	Q'ty
2	15A Cone	Polyamide resin	1
3	15A Float	SUS303	1
4	15A Glass tube	Hard glass	1
5	15A Tube receiving (under)	A2017	1
6	15A Tube receiving (upper)	A2017	1
8	Spring	SUS304-WPA	1
10	Spring Washer	SUS304	1
13	E Ring	SUS304	1
27	O Ring	NBR 1A	2
29	O Ring	NBR 1A	2
30	O Ring	NBR 1A	2
35	Teflon ring for 15A	Teflon	1
46	10A、15A Rod	SUS303	1
48	O Ring	Viton 4D (W)	1
49	Nylon boll	Nylon	1

CUSTOMER			
SPECIFICATION			
CHECKED BY Shimomu 2010.5.31	DRAWN BY T. T JAN. 26. '01	KOF-15 KIT-1	
SEC. CHIEF Miyazaki 5.31.10	DESIGNED BY		
KOWA CORP. OSAKA JAPAN		DWG. No. e-KOF15-KIT1	
		CODE No.	
		SCALE	

改REV	改定内容 DISCRIPTION	日付 DATE	担当 DESIGN
1	KOF-10,10/SPS,10U共通図とする	2010.1.12	宮崎

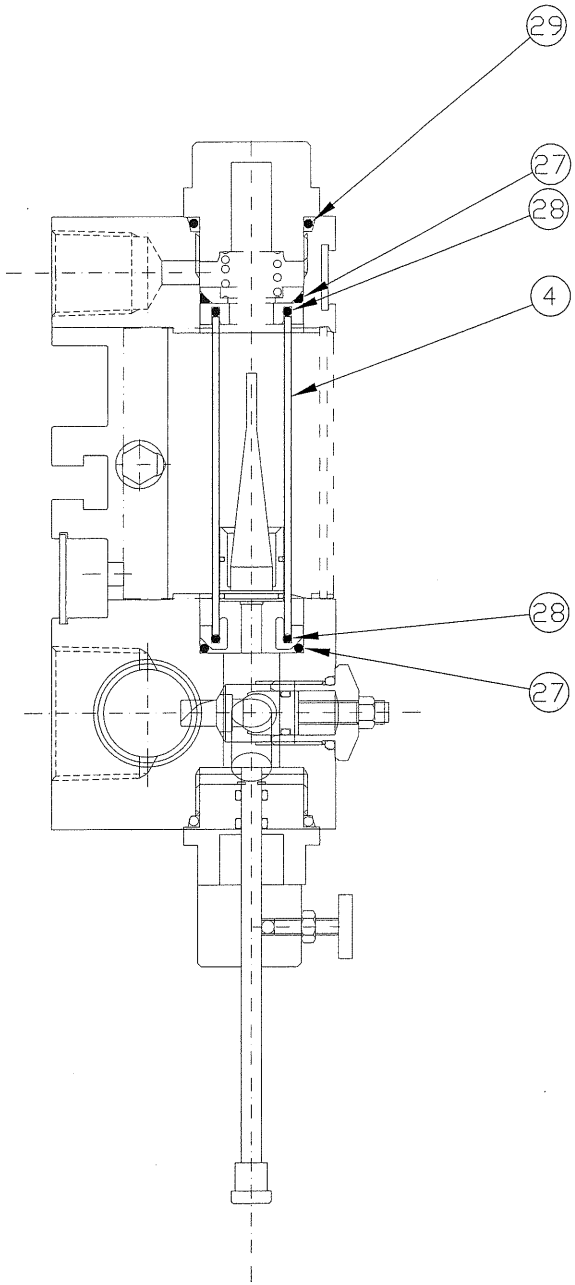

No	Item	Material	Q'ty
4	10A Glass tube	Hard glass	1
27	O Ring	NBR 1A	2
28	O Ring	NBR 1A	2
29	O Ring	NBR 1A	1

CUSTOMER

SPECIFICATION

CHECKED BY	DRAWN BY
Shimomu	T.T
2010.5.31	JAN.26'01
APPROVED BY	DESIGNED BY
Miyazaki 5.31.10	

KOF-10
KOF-10/SPS
KOF-10U
KIT-2

KOWA CORP.
OSAKA JAPAN

DWG.No. e-KOF10-KIT2 1

CFD.No.

CODE No.

3RD ANGLE PROJECTION

SCALE

DATE OF ISSUE

MFG.No.

協議印

出図先

購買

製造

客先

控

複写部数

A3

出図日

(A3)

改訂REV	改定内容 DISCRIPTION	日付 DATE	担当SIGN
1	Correction	H13.1.25	T.T

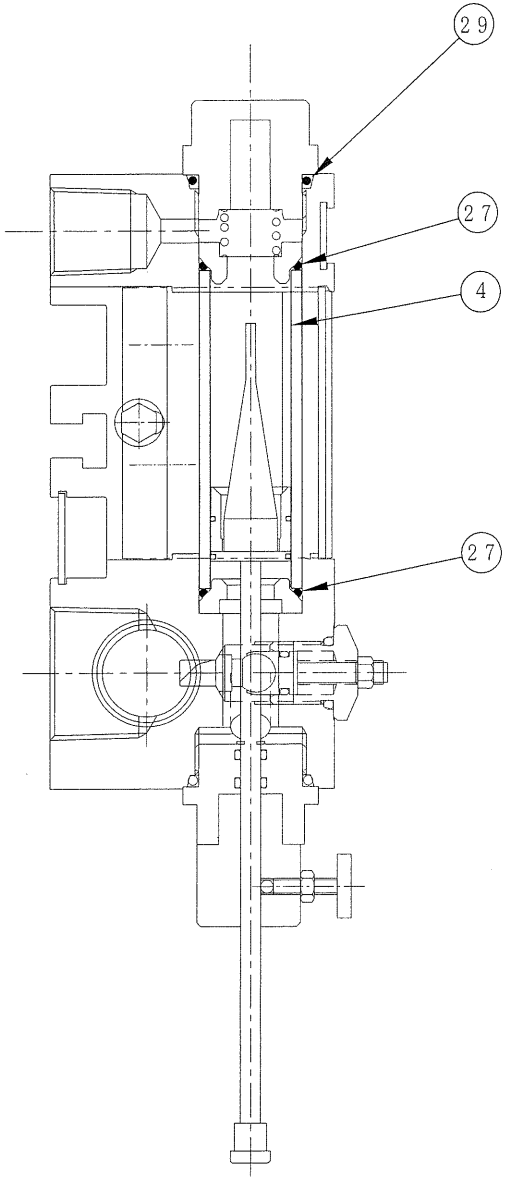

No	Item	Material	Q'ty
4	15A Glass tube	Hard glass	1
27	O Ring	NBR 1A	2
29	O Ring	NBR 1A	1

CUSTOMER

SPECIFICATION

CHECKED BY	DRAWN BY
Shimomo	F.M
2010.5.31	1999.5.11.
APPROVED BY	DESIGNED BY
Nizazaki	**
5.31'10	200*.**.**

KOF-15
KIT-2

KOWA CORP.
OSAKA JAPAN

DWG.No. e-KOF15-KIT2 △1

CFD.No.

CODE No.

3RD ANGLE PROJECTION

SCALE

DATE OF ISSUE

MFG.No.

協議印

出図先

購買

製造

客先

控

複写部数 A3

出図日

(A3)

改訂REV	改定内容 DISCRIPTION	日付 DATE	担当SIGN
1	Change the material of No.48		
△			
△			
△			

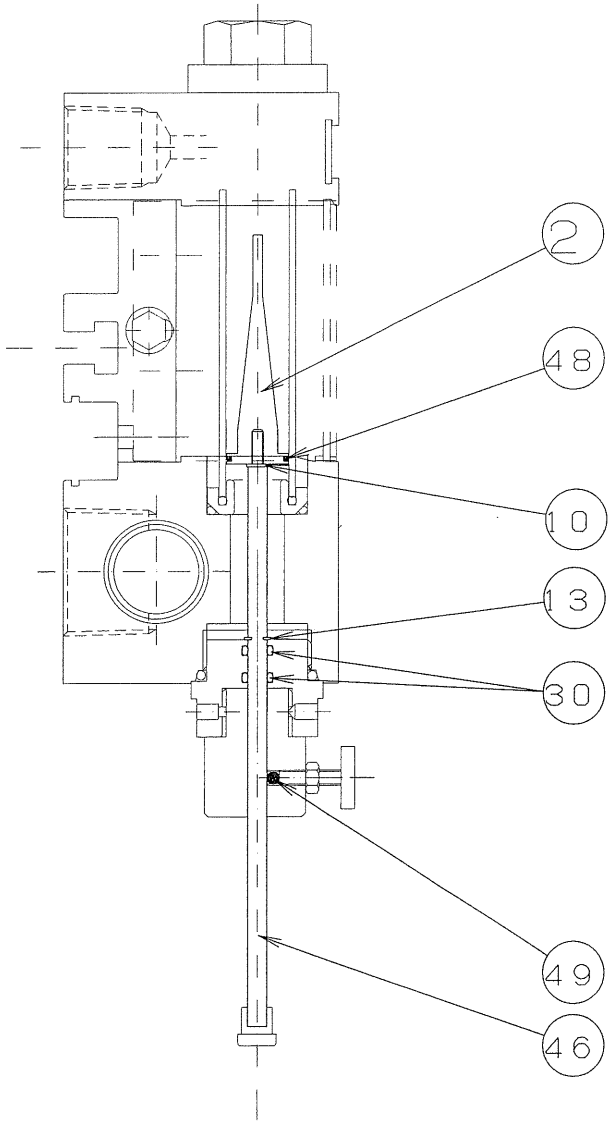

No	Item	Material	Q'ty
2	10A Cone	Polyamide resin	1
10	Spring Washer	SUS304	1
13	E Ring	SUS304	1
30	O Ring	NBR 1A	2
46	10A、15A Rod	SUS303	1
48	O Ring	Viton 4D (W)	1
49	Nylon boll	Nylon	1

CUSTOMER

SPECIFICATION

CHECKED BY	DRAWN BY
Shimomura 2010.5.31	T.T JAN,26'01
APPROVED BY	DESIGNED BY
Miyazaki 5.21'10	

KOF-10
KOF-10/SPS
KIT-3

KOWA CORP.
OSAKA JAPAN

DWG.No. e-KOF10-KIT3 1

CF D.No.

CODE No.

3RD ANGLE PROJECTION

SCALE

DATE OF ISSUE

MFG.No.

協議印

出図先

購買

製造

客先

控

複写部数 A3

出図日

改訂REV	改定内容 DISCRIPTION	日付 DATE	担当SIGN
△1			
△			
△			
△			

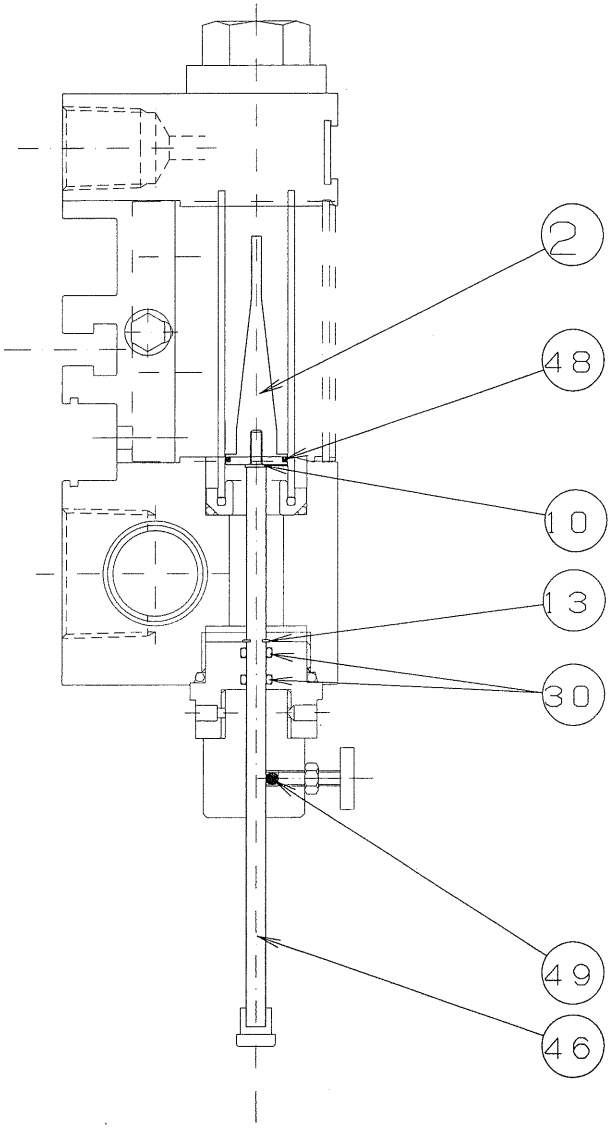

No	Item	Material	Q'ty
2	10U Cone	A2017	1
10	Spring Washer	SUS304	1
13	E Ring	SUS304	1
30	O Ring	NBR 1A	2
46	10A、15A Rod	SUS303	1
48	O Ring	VITON 4D (W)	1
49	Nylon boll	Nylon	1

CUSTOMER

SPECIFICATION

CHECKED BY	DRAWN BY
Shimomu 2010.5.31	T.T JAN.26'01
APPROVED BY	DESIGNED BY
Miyazaki 5.31'10	

KOF-10U
KIT-3

KOWA CORP.
OSAKA JAPAN

DWG.No. e-KOF10U-KIT3 △0

CFD.No.

CODE No.

3RD ANGLE PROJECTION

SCALE

DATE OF ISSUE

MFG.No.

協議印

出図先

購買

製造

客先

控

複写部数

A3

出図日

改訂REV	改定内容 DISCRIPTION	日付 DATE	担当SIGN
1	Change the material of No.48		
△			
△			
△			

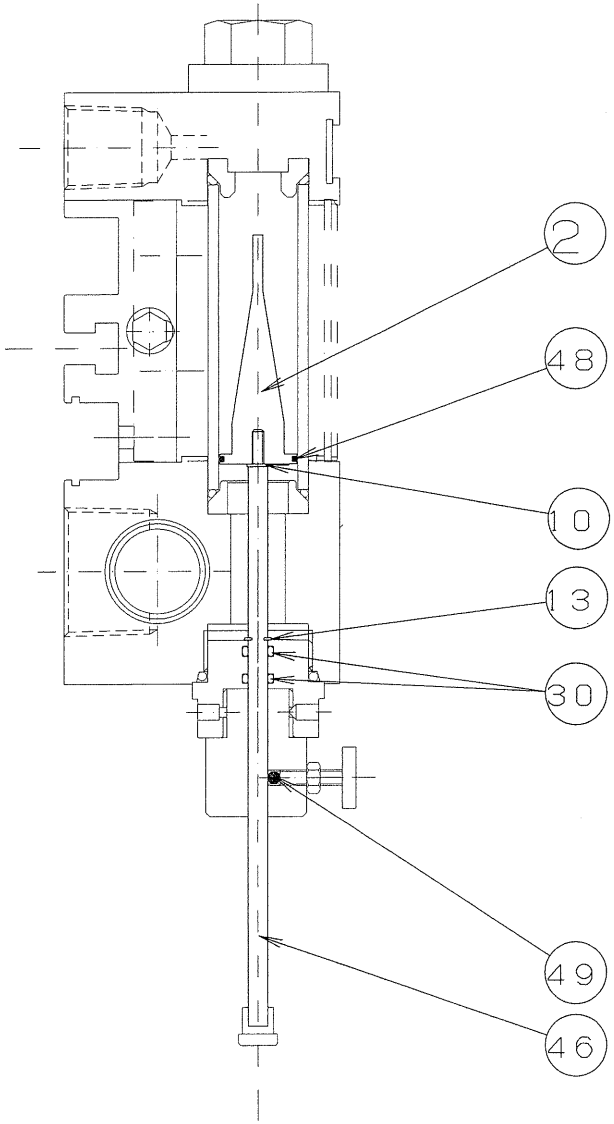

No	Item	Material	Q'ty
2	15A Cone	Polyamide resin	1
10	Spring Washer	SUS304	1
13	E Ring	SUS304	1
30	O Ring	NBR 1A	2
46	10A、15A Rod	SUS303	1
48	O Ring	Viton 4D (W)	1
49	Nylon boll	Nylon	1

CUSTOMER

SPECIFICATION

CHECKED BY	DRAWN BY
Shimomo	T.T
2010.5.31	JAN.26'01
APPROVED BY	DESIGNED BY
Miyazaki	**
2.31'10	200x.xx.xx

KOF-15
KIT-3

KOWA CORP.
OSAKA JAPAN

DWG.No. e-KOF15-KIT3 △1

CFD.No.

CODE No.

3RD ANGLE PROJECTION

SCALE

DATE OF ISSUE

MFG.No.

協議印

出図先

購買

製造

客先

控

複写部数

A3

出図日

(A3)

改REV	改定内容 DISCRIPTION	日付 DATE	担当SIGN
1	Common chart making	2010.1.12	F.M

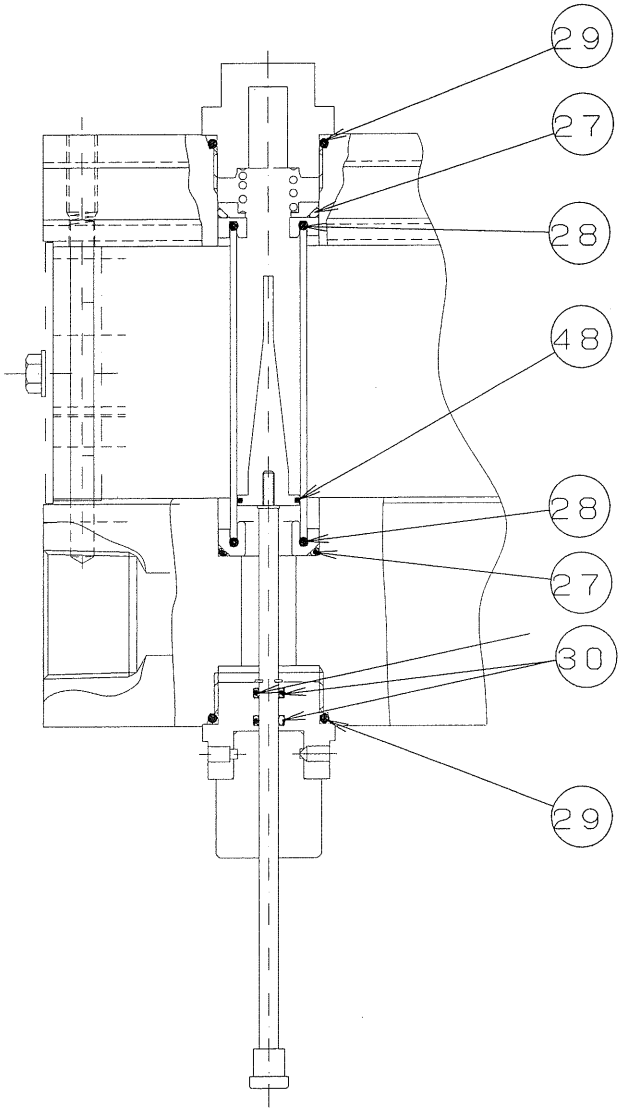

No	Item	Material	Q'ty
27	O Ring	NBR 1A	2
28	O Ring	NBR 1A	2
29	O Ring	NBR 1A	2
30	O Ring	NBR 1A	2
48	O Ring	Viton 4D (W)	1

CUSTOMER	
SPECIFICATION	
CHECKED BY: Shimoma 2010.5.31	DRAWN BY: T.T JAN.26'01
APPROVED BY: Miyazaki 5.31'10	DESIGNED BY
KOWA CORP. OSAKA JAPAN	KOF-10 / KOF-10/SPS / KOF-10U / KIT-4
DWG.No.	e-KOF10-KIT4 △1
CFD.No.	
CODE No.	
3RD ANGLE PROJECTION	SCALE
DATE OF ISSUE	MFG.No.

協議印
出図先
購買
製造
客先
控
複写部数
A3
出図日

5
(A3)

改訂REV	改定内容 DISCRIPTION	日付 DATE	担当SIGN
△			
△			
△			
△			

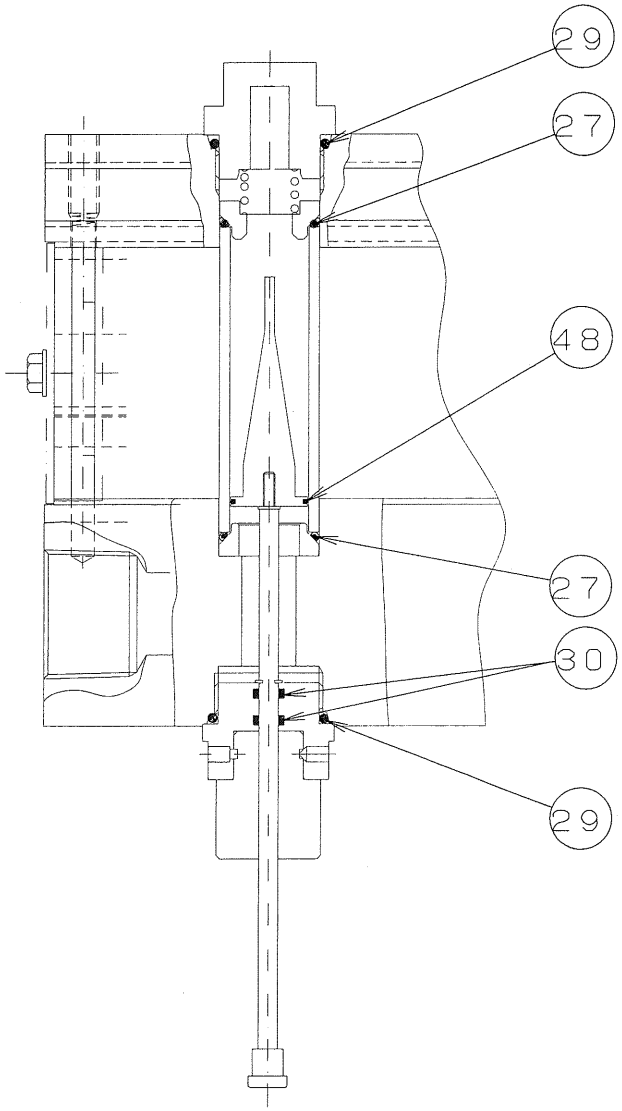

No	Item	Material	Q'ty
27	O Ring	NBR 1A	2
29	O Ring	NBR 1A	2
30	O Ring	NBR 1A	2
48	O Ring	Viton 4D (W)	1

CUSTOMER

SPECIFICATION

CHECKED BY	DRAWN BY
Shimono 2010.5.31	T.T JAN.26.'01
APPROVED BY	DESIGNED BY
Miyazaki 5.31.'10	** 200*.**.**

KOF-15
KIT-4

KOWA CORP.
OSAKA JAPAN

DWG.No. e-KOF15-KIT4 △0

CFD.No.

CODE No.

3RD ANGLE PROJECTION

SCALE

DATE OF ISSUE

MFG.No.

協議印

出図先

購買

製造

客先

控

複写部数

A3

出図日

(A3)

改訂REV	改定内容 DISCRIPTION	日付 DATE	担当SIGN
1	Model addition	2010.1.20	F.M

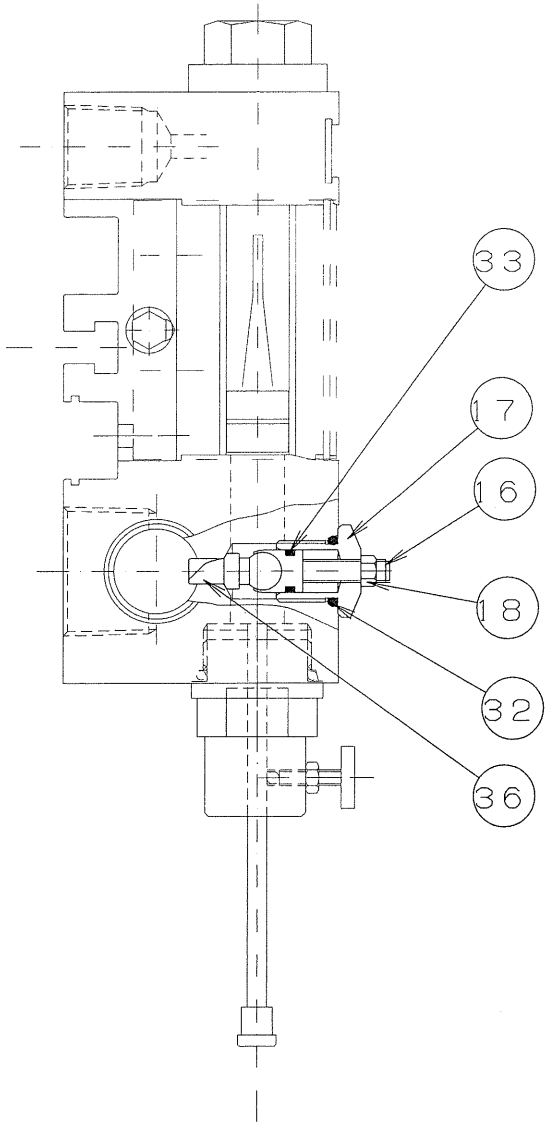

No	Item	Material	Q'ty
16,36	ValveAss'y	SUS303,Polyaamide resin	1
17	Valve guide	A2017	1
18	Hexagon nut	SUS304	1
32	O Ring	NBR 1A	1
33	O Ring	NBR 1A	1

CUSTOMER

SPECIFICATION

CHECKED BY	DRAWN BY
Shimano	T.T
2010.5.3	JAN.26.'01
APPROVED BY	DESIGNED BY
Yiyazaki	**
5.31.'10	200*.**.**

KOF-10,KOF-10/SPS
KOF-10U,KOF-15
KIT-5

KOWA CORP.
OSAKA JAPAN

DWG.No. e-KOF1015-KIT5 1

CFD.No.

CODE No.

3RD ANGLE PROJECTION

SCALE

DATE OF ISSUE

MFG.No.

協議印

出図先

購買

製造

客先

控

複写部数 A3

出図日

(A3)

Dear,

Dear

PAPER MACHINE・DRYPART

OIL FLOW SENSOR MONITOR

KOF－A－＊＊

Instruction Manual

Our Code Number :

APPROVAL	STAMP	CONTACT

KOWA CORPORATION

TEL. 0790-27-1315 FAX. 0790-27-1314

Safety Precautions

○ Before installation, operation and inspection of repair, please read this Instruction Manual so that you can use our products properly.
Also please use products after you get knowledge of products, safety information and precautions.
This Lubricating System shows safety information as a safety sign on equipment.
Please handle them with care especially these parts tagged a safety sign.
Mainly, there are two types of safety sign, "Warning" and "Caution". In addition, there are several equal signs.
Every sign shows important information, therefore please keep information.

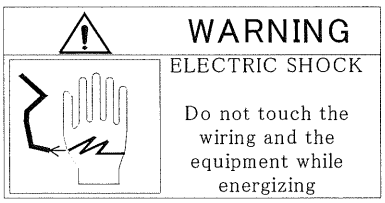

ELECTRIC SHOCK
Do not touch the equipment and the wiring while driving .

It is likely to die when handling is mistaken .

ELECTRIC SHOCK
Do not touch the equipment and the wiring while driving .

It is likely to die when handling is mistaken .

When handling mistaken,
it becomes important injury or
a serious damage only accident.

Instruction for proper use

1. Keep a sensor panel away from water.
   It may cause malfunction.
   Moreover, it may cause a fire and other serious accidents.

2. Do not operate a product with wet hands.
   It may cause electric shock.

3. Do not open a door during turning on electricity.
   When you need to operate or do other things, only qualified people can do.
   Also do not touch a terminal and other parts during operation.
   It may cause electric shock.

4. Wiring Work
   When you install jumping wires and wiring work at sensor disuse area, you should check if you already turn off the power source.
   It may cause electric shock.

5. A flowmeter is caught in a glass tube sometime because of extraneous matter or dirt.
   Please clean a rod for a cone setting up (or for cleaning) by moving top and bottom.
   Please refer the Instruction Manual for Oil Flow Flow meter "1 - 2 (4)"
   When you adjust a flow rate with the adjust valve and other things, the float moves up and down. If the float does not move, it is highly possible that the float may be caught by extraneous matter, therefore be careful.

INDEX

Safety Precautious ---------- 1
Instruction for proper use ---------- 2
1. Main specification ---------- 4
   1.1 Overall
   1.2 Oil Sensor Panel
   1.3 Sensor
2. Wire ---------- 6
   2.1 Power Source
   2.2 A Warning Output
   2.3 Sensor
3. Attached materials ---------- 8

An attached drawing

		Power Sourse	Drawing Number	Place of a Door	Q'ty of drawing
Drawing for sensor monitor	For ten points	AC100V	e-KOF-CP-110	Front	2pcs
		AC200V	e-KOF-CP-210	Front	2pcs
	For twenty points	AC100V	e-KOF-CP-120	Front	2pcs
		AC200V	e-KOF-CP-220	Front	2pcs
	For thirty points	AC100V	e-KOF-CP130	Front	2pcs
		AC200V	e-KOF-CP-230	Front	2pcs
	For sixty points	AC100V	e-KOF-CP-160	Front and Back	4pcs
			e-KOF-CP-160-L	Front	4pcs
		AC200V	e-KOF-CP-260	Front and Back	4pcs
			e-KOF-CP-260-L	Front	4pcs
A Drawing For Low Level Alarm			e-KOF-SENSOR-R7	-	1pc

Attached Materials

Seqencer User's Manual (Excerption) ——— Section 6 : 16 pages (Troubleshooting)

Notice: [CX-Programmer] in explanation indicates a software for a seqencer program. Therefore when you use it, please purchase it.

1) You can check with LED light.
2) You can input the program on a computer with the ladder drawing which we provide you separately.

1. Main Specification

1.1 Overall

Equip a proximity switch with each flow meter (glass tube) of an oil flow and check decrease of flow rate for each flow meter by an oil sensor monitor.

1.2 Oil Flow Sensor Panel

A sensor panel has 10 points, 20 points, 30 points and 60 points.
For feature and other information, please refer the attached drawing.

1) Structure　Made of Copper
A-Wall-Mounted・Dustproof・Indoor

2) Use Temperature
0 ℃ ～ 50 ℃

3) Power Sources　AC100V/110V (50Hz/60Hz)
AC200V/220V (50Hz/60Hz)
Operation Circuit　AC100V/110V (50Hz/60Hz) 、 DC24V
AC200V/220V (50Hz/60Hz) 、 DC24V

4) Seqencer
Model　CP1E-E20DR-A 、 CP1E-E40DR-A
Specification of Power Sources　AC100V～240V
Specification of Input　DC24V ＋10% 、－15%
ON Voltage／Current : DC17V 3mA or More
OFF Voltage／Current : DC5V 1mA or Less
Output Specification MAX : AC250V/2A
DC24V/2A (4A／Common)
Input/Output Terminal : A LED Indication
Situation of Flow Meter is shown at 「LED」
LED Lighting : Normal
LED Lighting Out : Unusual (Flow Rate is declining, Sensor Defect, Disconnection)

5) Timer (Timer Inside Seqencer)
This alarm is used for prevent from an alarm reaction by a temporary change of flow rate, when you start to operate the lubricating system.
At a certain time after a sensor operates, it outputs a warning by a lighting pilot lamp of flowing volume decrease (RL of a board side)
Set Time : 10 seconds

6) A Pilot Lamp

On the panel WL : Power Sources

RL : Unusual(One lamp shows max 10 points)

(Flow rate is declining, sensor defect, disconnection)

Notion: RL (Unusual sign) lights ten seconds later when anything unusual happens——— A warning output

When it returns to normal within ten seconds, RL does not light and no waning sign.

Inside the panel

A. Input Terminal of Seqencer LED

It displays state of each flow meter

LED Lighting : Normal

LED Lighting Out : Unusual (Flow rate is declining, sensor defect, disconnection)

Notion: LED of the seqencer shows operation state of a sensor regardless of timer, so when float of oil flow goes down a certain level from an adjust line, LED lights out immediately.

B. Error of Seqencer

As for error of CPU Unit itself, please refer an attached user's manual for CE1CPU unit (Excerption-Troubleshooting)

Notion: When a program error shows up, please re-enter a ladder drawing which we supply separately.

7) Outside Output

When a warning happens (RL is lighting), it shows warning signals all together.

Output : Relay (No-Voltage)

Number of Terminal : 21−22

1.3 Sensor

Model : GXL-15FLU

A light inside a sensor (LED) : Green−safe area

Red−Unstable Area

Lighting Out−Flow Rate is declining

1) Relationship of a warning light (RL) among a sensor, a seqencer and a board side

State of Oil Supply	Sensor (LED)		Seqencer Input Area (LED)	Panel Display Light (A board side RL)
	Green	Red		
Normal	Lighting	Lighting Out	Lighting	Lighting Out
	Lighting Out	Lighting	Lighting	Lighting Out
Decrease of Flow Rate	Lighting Out	Lighting Out	Lighting Out	Lighting

2) Causes of lighting of a warning

a. Decrease of flow rate

b. Sensor defect

c. Disconnection, inferior wires

3) Treatment when you do not use a sensor

Equip a jumping wire on a stand for a sensor terminal, and shortcut.

If you forget a jumping wire, a warning comes up.

2. Wiring

As for wiring, please refer a drawing of oil flow sensor monitor.

2.1 Power Sources

Wire after checking voltage of a power source by specifications or a drawing of sensor monitor.

Terminal Number : R－T AC100V/110V or AC200V/220V (50/60Hz)

Application Wire : 1.25 ～ 2.0 sq

2.2 Output

Number of Terminal : 21－22

2.3 Sensor

Sensor takes ten pieces as one block.

→ Because it regards one block (1point～10points) of oil flow as one unit.

Ex) Number of terminal 101～110 (1 Type) — Compatible with RL1 (Warning)

Number of terminal 201～210 (2 Type) — Compatible with RL2 (Warning)

Therefore if an oil flow is less than 10 points, please do not use the rest of terminal and equip a jumping wire.

Notice: If you equip other flow sensor's sensor, they operates normally, however, it would be hard to see a connection between a warning and a flow meter (a flow rate pipe/ a glass pipe).

Wiring Points (Below)

Please wire blue color wires on N terminal.

If you do not use a sensor, you should shortcut with a jumping wire.

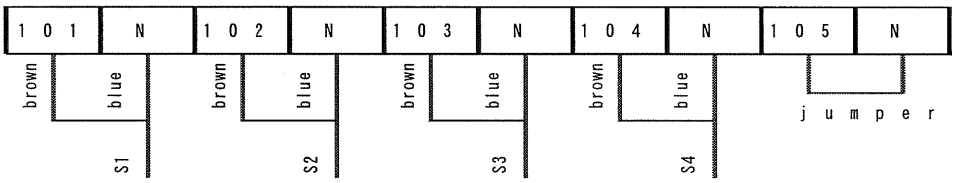

3. Position of a sensor monitor and an oil flow

You should install a sensor monitor within three meter from the flowmeter.

(a lead wire of a sensor : 5m)

If it is possible, please equip this beside an oil flow panel.

4. Installation Area of Sensor Panel And a Warning Signal

Installation area of a sensor panel and a warning signal depends on model of a flow meter. Please refer the drawing of low level alarm.

5. Setting Up a Flow Meter of Oil Flow

Please refer " Instruction Manual for Oil Flow Flow Meter"

The following is an attached drawing

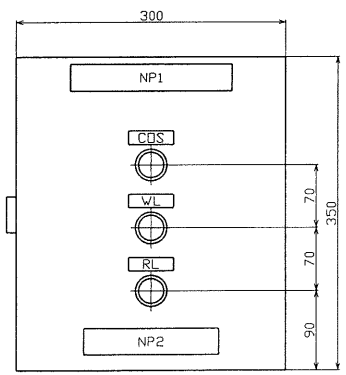

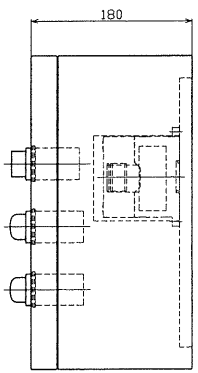

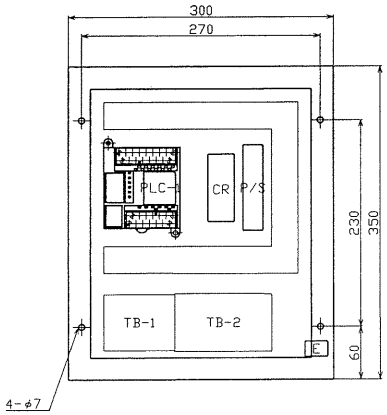

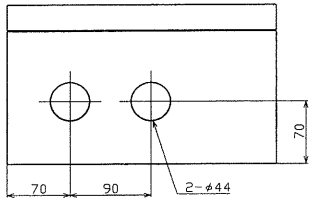

Wiring

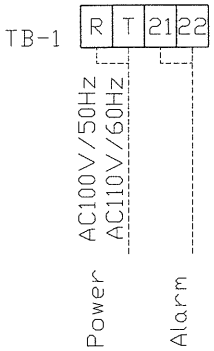

Wiring of sensor

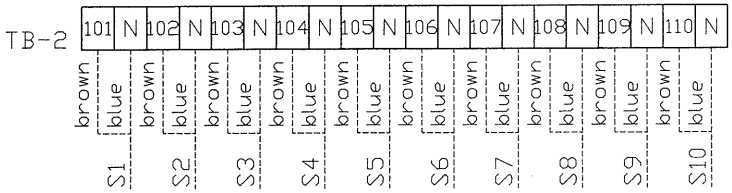

Parts list

Mark	Item	Model or Spec.	Q'ty
PLC-1	Seqencer	CP1E-E20DR-A	1
CR	Auxiliary relay	MY4N	1
P/S	Power supply	S8VS-01524	1
COS	Selective switch	ASN320	1
WL	Pilot lamp (W)	APN116DNW	1
RL	Pilot lamp (R)	APN116DNR	1
TB-1	Terminal for Power	BNF10N(2A)	2P
	Terminal for Alarm	BNH10W	2P
TB-2	Terminal for sensor	BC1S-1.5T	20
–	Box	be equal to IP42	1

Name plate (Acrylic fiber)

Mark	Character	Size
NP1	Oil flow sensor monitor	180×30×3t
NP2	KOWA CORPORATION	150×30×3t
COS	OFF ON	50×15×3t
WL	POWER	
RL	Abnormal	

Painting
Printing painting
Color : Munsell 5Y7/1

Note
Please put jumping wire in the corresponding terminal when there is a sensor not used.

REV	DESCRIPTION	DATE	SIGN
2			
1			

KOWA CORP.
OSAKA JAPAN

CHECKED BY	DRAWN BY
Shimomo 2010.5.21	宮崎 2010.1.21
APPROVED	DESIGNED BY
Miyazaki 5.21'10	Miyazaki 2010.1.8

TITLE
Oil flow sensor monitor 10P

DWG.No. e-KOF-CP-110 0
SHEET No. 1/2
CFD.No.
CODE No.
DATE OF ISSUE
MFG. No.

協議印
出図先
購買
製造
客先
控
複写部数
A3
出図日

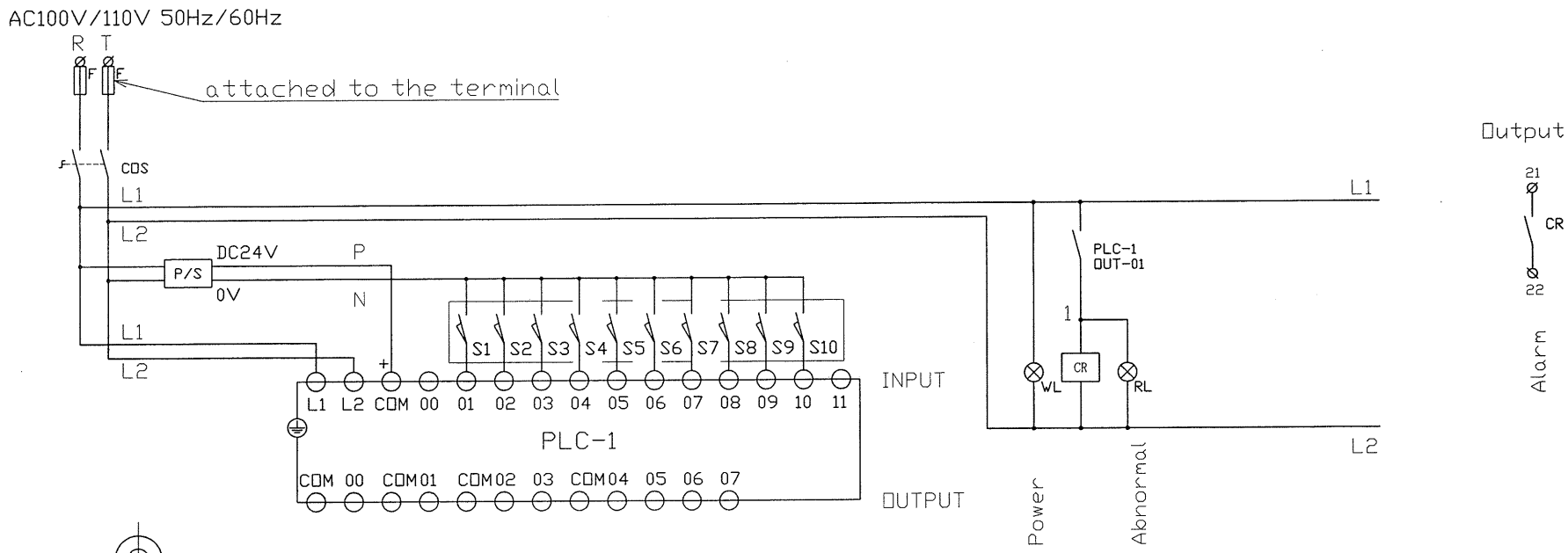

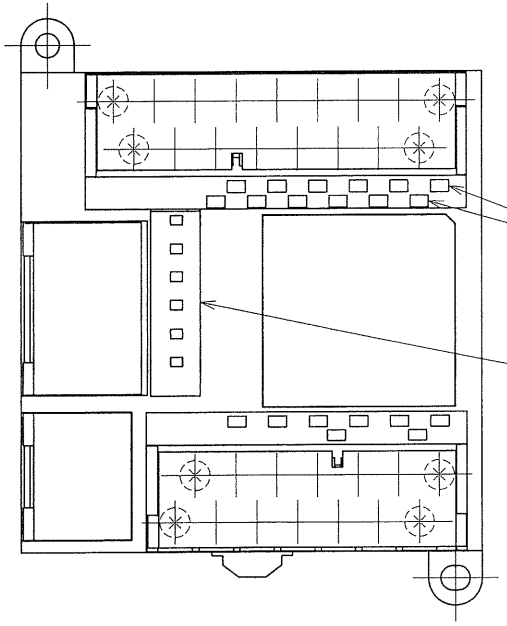

State display of each sensor.
LED Lighting : Normality
LED Turning off : Abnormality

Operation state display

REV	DESCRIPTION	DATE	SIGN
2			
1			

KOWA CORP.
OSAKA JAPAN

CHECKED BY	DRAWN BY
Shimomura 2010.5.21	宮崎 2010.1.21
APPROVED	DESIGNED BY
Miyazaki 5.21'10	Miyazaki 2010.1.8

TITLE: Oil flow sensor monitor 10P

DWG.No.	SHEET No.
e-KOF-CP-110 0	2/2
CFD.No.	
CODE No.	
DATE OF ISSUE	MFG. No.

A3

協議印
出図先
購買
製造
客先
控
複写部数
出図日

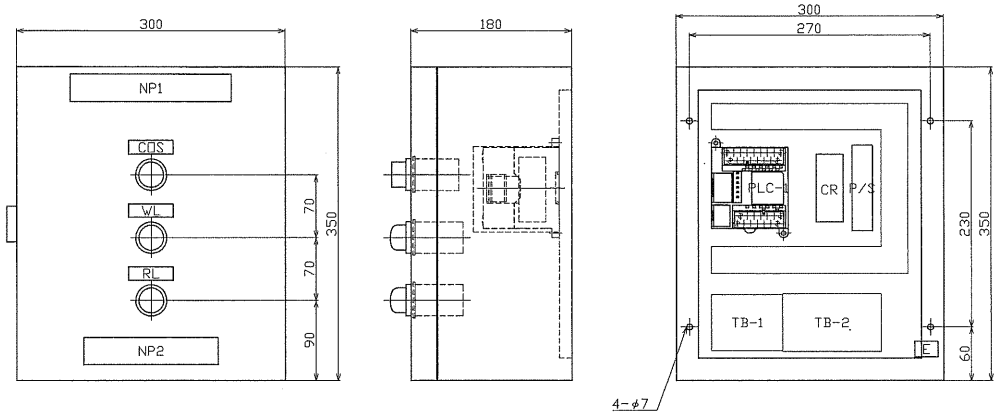

Parts list

Mark	Item	Model or Spec.	Q'ty
PLC-1	Seqencer	CP1E-E20DR-A	1
CR	Auxiliary relay	MY4N	1
P/S	Power supply	S8VS-01524	1
COS	Selective switch	ASN320	1
WL	Pilot lamp (W)	APN126DNW	1
RL	Pilot lamp (R)	APN126DNR	1
TB-1	Terminal for Power	BNF10N(1A)	2P
	Terminal for Alarm	BNH10W	2P
TB-2	Terminal for sensor	BC1S-1.5T	20
-	Box	be equal to IP42	1

Name plate (Acrylic fiber)

Mark	Character	Size
NP1	Oil flow sensor monitor	180×30×3t
NP2	KOWA CORPORATION	150×30×3t
COS	OFF ON	50×15×3t
WL	POWER	
RL	Abnormal	

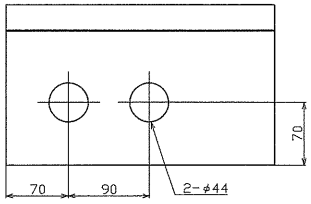

Wiring

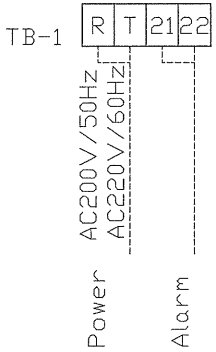

Wiring of sensor
PLC-1

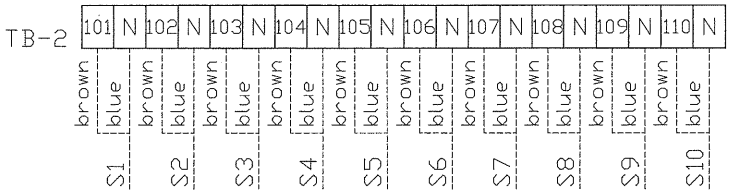

Painting
Printing painting
Color : Munsell 5Y7/1

Note
Please put jumping wire in the corresponding terminal when there is a sensor not used.

REV	DESCRIPTION	DATE	SIGN
2			
1	Correction of errors in voltage	2012/6/7	nakaike

KOWA CORP.
OSAKA JAPAN

CHECKED BY	DRAWN BY
Shimomura 2012.6.7	宮崎 2010.1.21
APPROVED	DESIGNED BY
Kato Jun 7 '12	Miyazaki 2010.1.8

TITLE
Oil flow sensor monitor 10P

DWG.No.	SHEET No.
e-KOF-CP-210 1	1/2
CFD.No.	
CODE No.	
DATE OF ISSUE	MFG. No.

協議印
出図先
購買
製造
客先
控
複写部数
A3
出図日

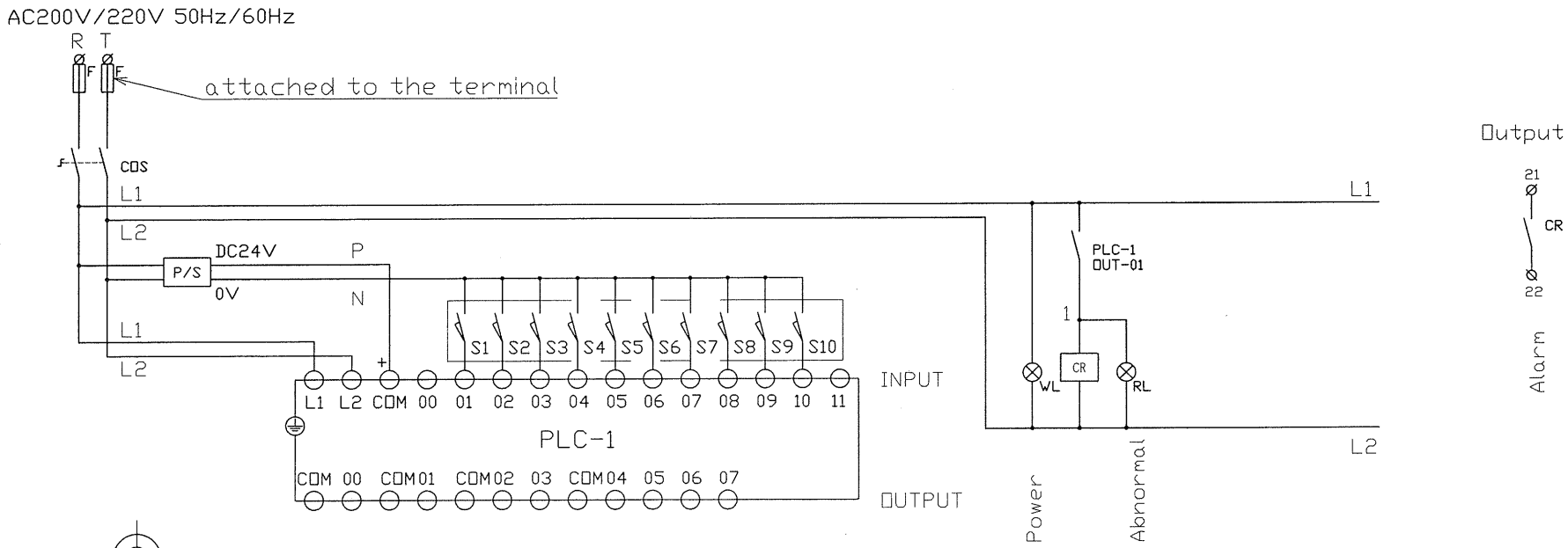

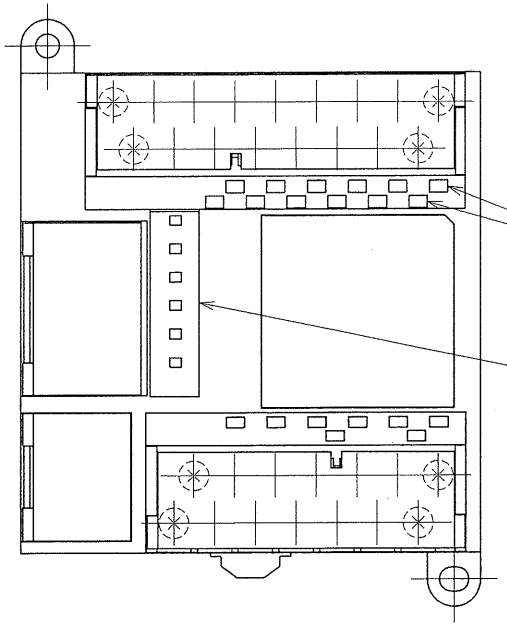

State display of each sensor.
LED Lighting : Normality
LED Turning off : Abnormality

Operation state display

REV	DESCRIPTION	DATE	SIGN
2			
1			

KOWA CORP.
OSAKA JAPAN

CHECKED BY	DRAWN BY
Shimomo 2010.5.21	宮崎 2010.1.21
APPROVED	DESIGNED BY
Miyazaki 5.21'10	Miyazaki 2010.1.8

TITLE
Oil flow sensor monitor 10P

DWG.No.	SHEET No.
e-KOF-CP-210 0	2/2
CFD.No.	
CODE No.	
DATE OF ISSUE	MFG. No.

A3

協議印
出図先
購買
製造
客先
控
複写部数
出図日

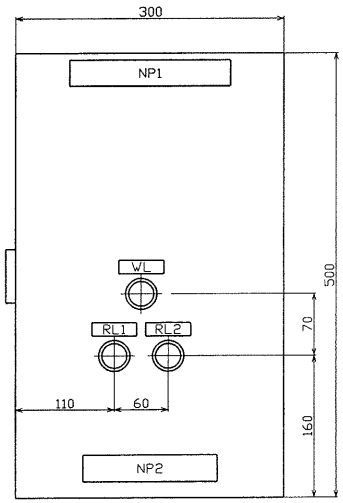

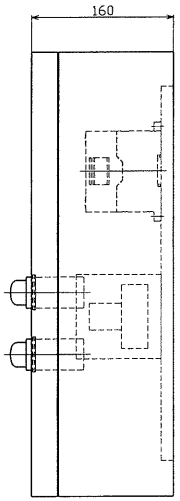

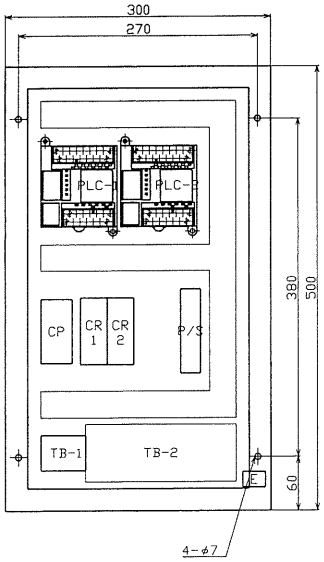

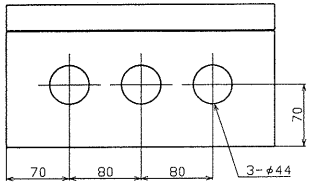

Parts list

Mark	Item	Model or Spec.	Q'ty
PLC-1,2	Seqencer	CP1E-E20DR-A	1
CP	Circuit protector	CP32F-M/2A	1
CR	Auxiliary relay	MY4N	2
P/S	Power supply	S8VS-01524	1
WL	Pilot lamp (W)	APN116DNW	1
RL	Pilot lamp (R)	APN116DNR	2
TB-1	Terminal	BNH15MW	4P
TB-2	Terminal for sensor	BC1S-1.5T	40
–	Box	be equal to IP42	1

Name plate (Acrylic fiber)

Mark	Character	Size
NP1	Oil flow sensor monitor	180×30×3t
NP2	KOWA CORPORATION	150×30×3t
WL	Power	50×15×3t
RL1	Abnormal of No.1	
RL2	Abnormal of No.2	

Wiring

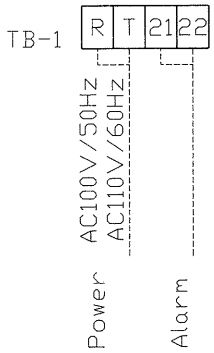

Painting
Printing painting
Color : Munsell 5Y7/1

Note
Please put jumping wire in the corresponding terminal when there is a sensor not used.

Wiring of sensor

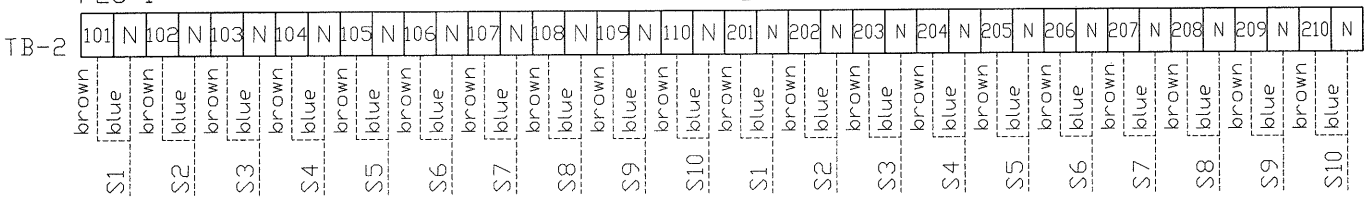

REV	DESCRIPTION	DATE	SIGN
2			
1			

KOWA CORP.
OSAKA JAPAN

CHECKED BY	DRAWN BY
Shimomo 2010.5.21	宮崎 2010.1.21
APPROVED	DESIGNED BY
Miyazaki 5/21/10	Miyazaki 2010.1.21

TITLE
Oil flow sensor mornitor 20P

DWG.No.	SHEET No.
e-KOF-CP-120 0	1/2
CFD.No.	
CODE No.	
DATE OF ISSUE	MFG. No.

A3

協議印
出図先
購買
製造
客先
控
複写部数
出図日

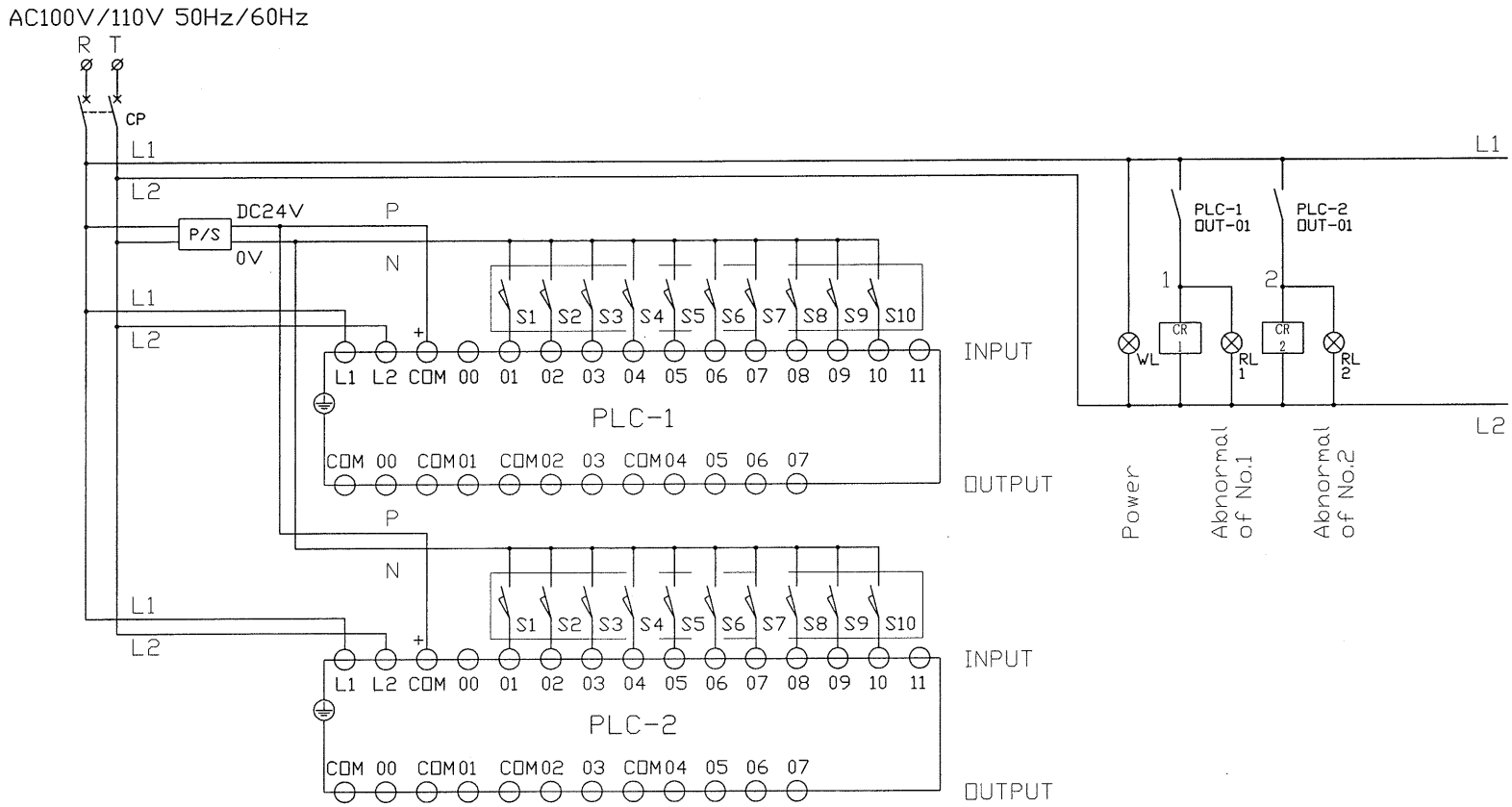

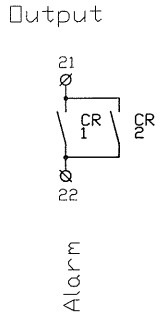

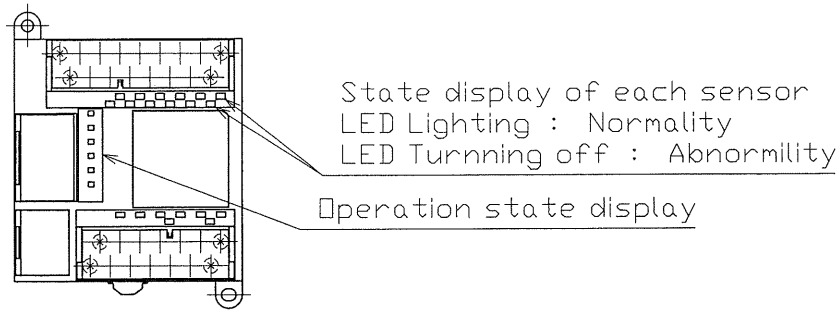

REV	DESCRIPTION	DATE	SIGN
2			
1			

KOWA CORP.
OSAKA JAPAN

CHECKED BY	DRAWN BY
Shimono 2010.5.21	宮崎 2010.1.21
APPROVED	DESIGNED BY
Miyazaki 5.21	Miyazaki 2010.1.21

TITLE: Oil flow sensor mornitor 20P

DWG.No.	SHEET No.
e-KOF-CP-120 △0	2/2
CFD.No.	
CODE No.	

DATE OF ISSUE | MFG. No.

協議印 | 出図先 | 購買 | 製造 | 客先 | 控 | 複写部数 | A3 | 出図日

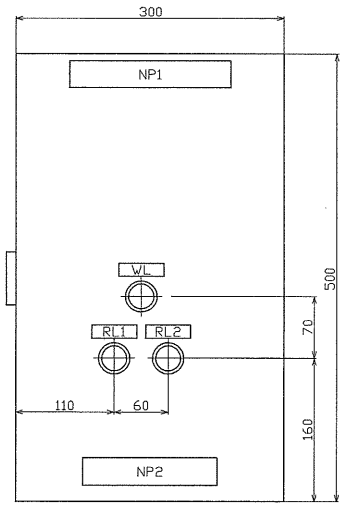

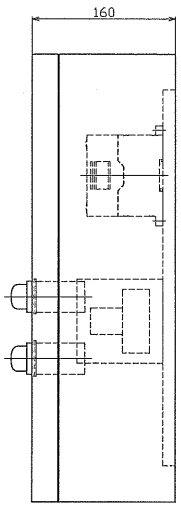

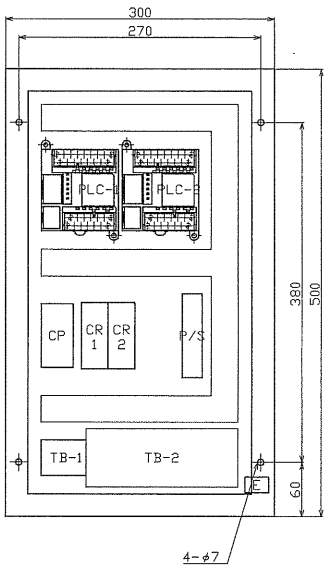

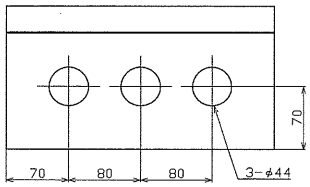

Parts list

Mark	Item	Model or Spec.	Q'ty
PLC-1,2	Seqencer	CP1E-E20DR-A	1
CP	Circuit protectoe	CP32F-M/2A	1
CR	Auxiliary relay	MY4N	2
P/S	Power supply	S8VS-01524	1
WL	Pilot lamp (W)	APN126DNW	1
RL	Pilot lamp (R)	APN126DNR	2
TB-1	Terminal	BNH15MW	4P
TB-2	Terminal for sensor	BC1S-1.5T	40
-	Box	be equal to CH16-35	1

Name plate (Acrylic fiber)

Mark	Character	Size
NP1	Oil flow sensor monitor	180×30×3t
NP2	KOWA CORPORATION	150×30×3t
WL	Power	50×15×3t
RL1	Abnormal of No.1	
RL2	Abnormal of No.2	

Wiring

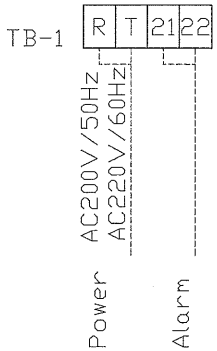

Painting
Printing painting
Color : Munsell 5Y7/1

Note
Please put jumping wire in the corresponding terminal when there is a sensor not used.

Wiring of sensor

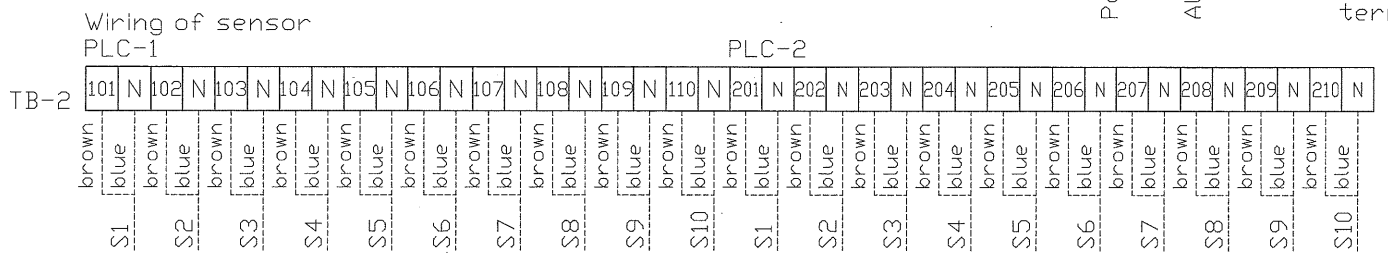

REV	DESCRIPTION	DATE	SIGN
2			
1	Correction of errors in voltage	2012/6/7	nakaike

KOWA CORP.
OSAKA JAPAN

CHECKED BY	DRAWN BY
Shimono 2012-6-7	宮崎 2010.1.21
APPROVED	DESIGNED BY
Kato 2012-6-7	Miyazaki 2010.1.21

TITLE: Oil flow sensor monitor 20P

DWG.No. e-K□F-CP-220 1
SHEET No. 1/2
A3
CFD.No.
CODE No.
DATE OF ISSUE
MFG. No.

協議印
出図先
購買
製造
客先
控
複写部数
出図日

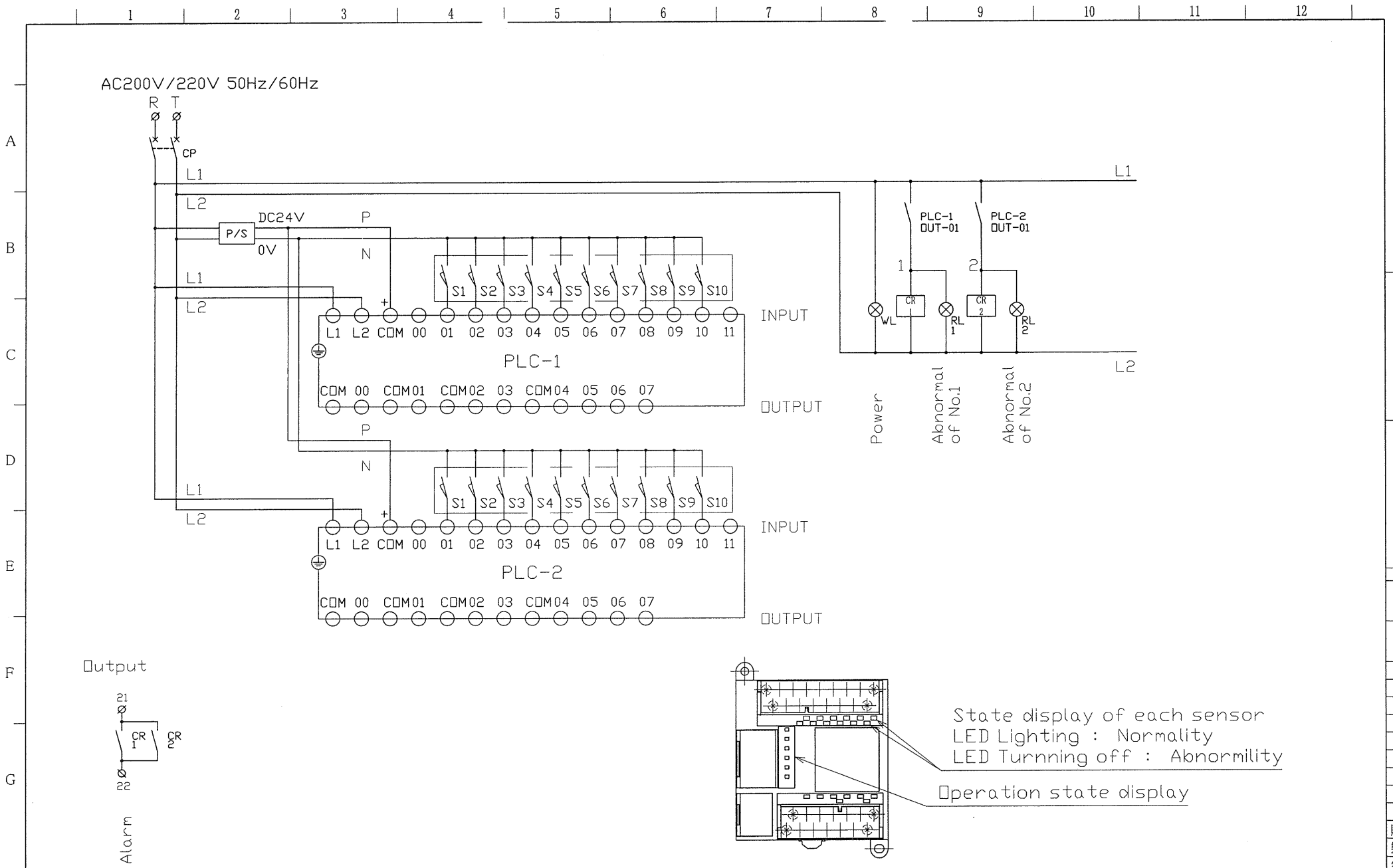

REV	DESCRIPTION	DATE	SIGN
2			
1			

KOWA CORP.
OSAKA JAPAN

CHECKED BY	DRAWN BY
Shimomo 2010.5.21	宮崎 2010.1.21
APPROVED	DESIGNED BY
Miyazaki 5.21'10	Miyazaki 2010.1.21

TITLE: Oil flow sensor monitor 20P

DWG.No.	SHEET No.
e-KOF-CP-220 0	2/2
CFD.No.	
CODE No.	
DATE OF ISSUE	MFG. No.

A3

協議印
出図先
購買
製造
客先
控
複写部数
出図日

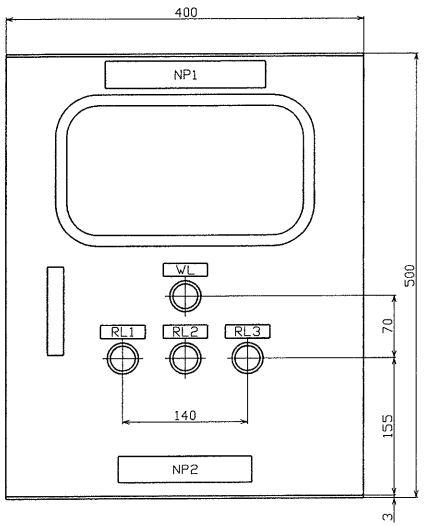

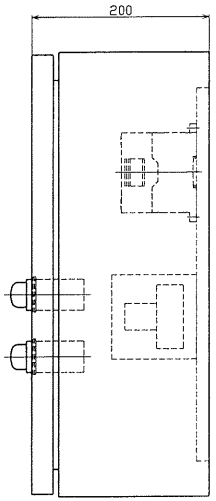

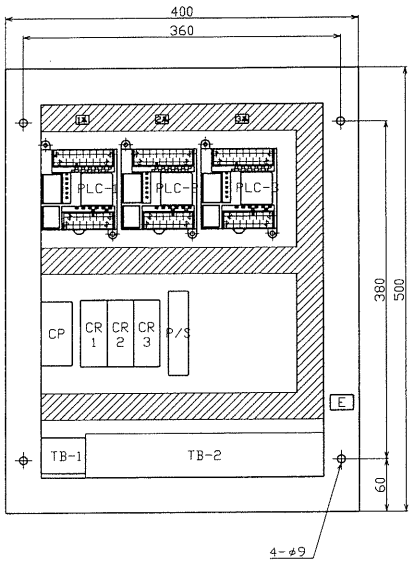

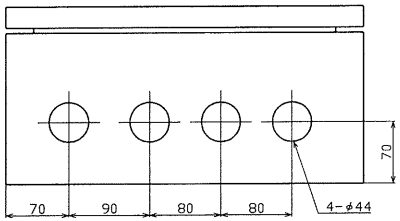

Parts list

Mark	Item	Model or Spec.	Q'ty
PLC-1	Sequencer for No.1	CP1E-E20DR-A	1
PLC-2	Sequencer for No.2	CP1E-E20DR-A	1
PLC-3	Sequencer for No.3	CP1E-E20DR-A	1
CP	Circuit protector	CP32F-M/2A	1
CR	Auxiliary relay	MY4N	3
P/S	Power supply	S8VS-01524	1
WL	Pilot lamp (W)	APN116DNW	1
RL	Pilot lamp (R)	APN116DNR	3
TB-1	Terminal	BNH15MW	4P
TB-2	Terminal for sensor	BC1S-1.5T	60P
-	Box	be equal to RAM20-45A	1

Name plate (Acrylic fiber)

Mark	Character	Size
NP1	Oil flow sensor monitor	180×30×3t
NP2	KOWA CORPORATION	150×30×3t
WL	Power	50×15×3t
RL1	Abnormal of No.1	
RL2	Abnormal of No.2	
RL3	Abnormal of No.3	

Wiring

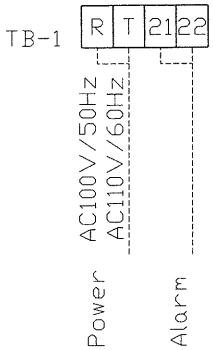

Painting
Printing painting
Color : Munsell 5Y7/1

Note
Please put jumping wire in the corresponding terminal when there is a sensor not used.

Wiring of sensor

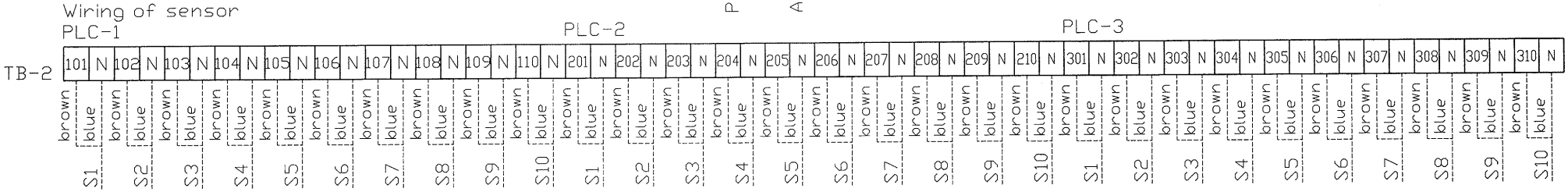

REV	DESCRIPTION	DATE	SIGN
2			
1			

KOWA CORP.
OSAKA JAPAN

CHECKED BY	DRAWN BY
Shimomura 2010.5.21	宮崎 2010.1.21
APPROVED	DESIGNED BY
Miyazaki 5.21'10	Miyazaki 2009.8.26

TITLE
Oil flow sensor monitor 30P

DWG.No.	SHEET No.
e-KOF-CP-130 0	1/2
CFD.No.	
CODE No.	
DATE OF ISSUE	MFG. No.

A3

協議印
出図先
購買
製造
客先
控
複写部数
出図日

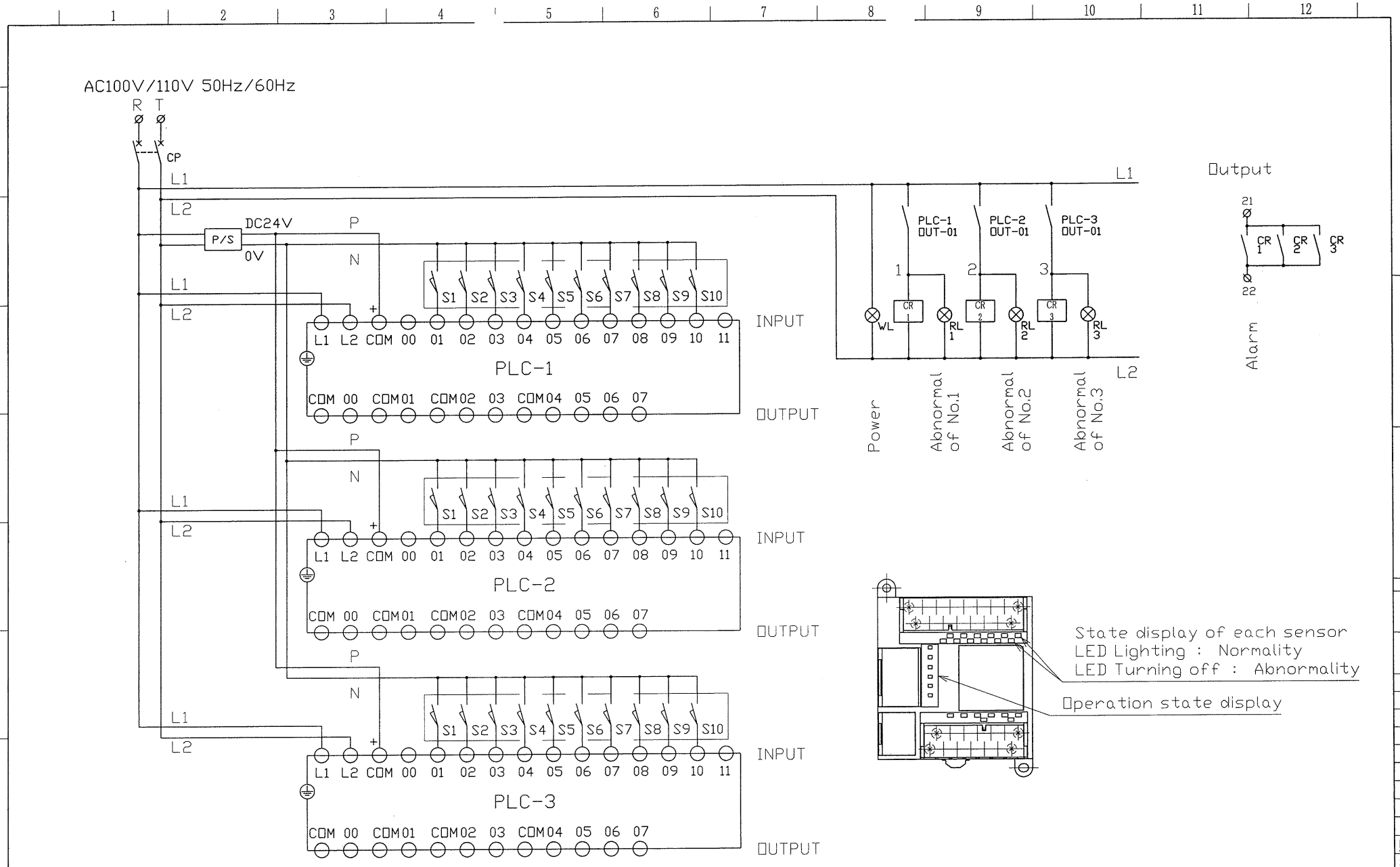

REV	DESCRIPTION	DATE	SIGN
2			
1			

KOWA CORP.
OSAKA JAPAN

CHECKED BY	DRAWN BY
Shimomo 2010.5.21	宮崎 2010.1.21
APPROVED	DESIGNED BY
Miyazaki 5/21'10	Miyazaki 2009.8.26

TITLE: Oil flow sensor monitor 30P

DWG.No. e-KOF-CP-130 0
SHEET No. 2/2
A3
CFD.No.
CODE No.
DATE OF ISSUE
MFG. No.

協議印
出図先
購買
製造
客先
控
複写部数
出図日

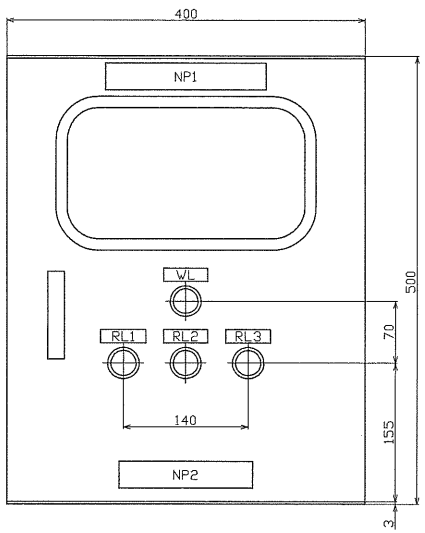

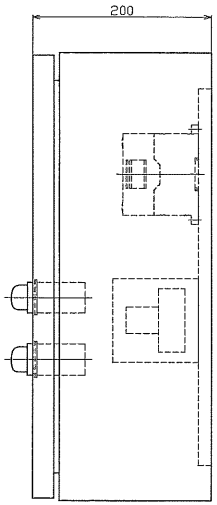

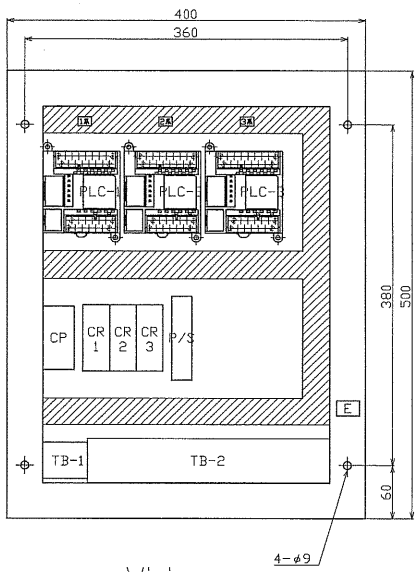

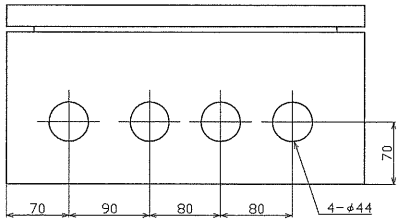

Wiring

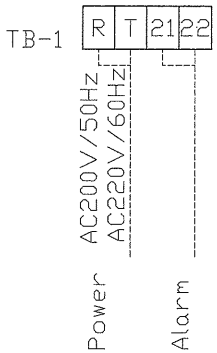

Parts list

Mark	Item	Model or Spec.	Q'ty
PLC-1	Sequencer for No.1	CP1E-E20DR-A	1
PLC-2	Sequencer for No.2	CP1E-E20DR-A	1
PLC-3	Sequencer for No.3	CP1E-E20DR-A	1
CP	Circuit protector	CP32F-M/2A	1
CR	Auxiliary relay	MY4N	3
P/S	Power supply	S8VS-01524	1
WL	Pilot lamp (W)	APN126DNW	1
RL	Pilot lamp (R)	APN126DNR	3
TB-1	Terminal	BNH15MW	4P
TB-2	Terminal for sensor	BC1S-1.5T	60P
–	Box	be equal to RAM20-45A	1

Name plate (Acrylic fiber)

Mark	Character	Size
NP1	Oil flow sensor monitor	180×30×3t
NP2	KOWA CORPORATION	150×30×3t
WL	Power	50×15×3t
RL1	Abnormal of No.1	
RL2	Abnormal of No.2	
RL3	Abnormal of No.3	

Painting
Printing painting
Color : Munsell 5Y7/1

Note
Please put jumping wire in the corresponding terminal when there is a sensor not used.

Wiring of sensor

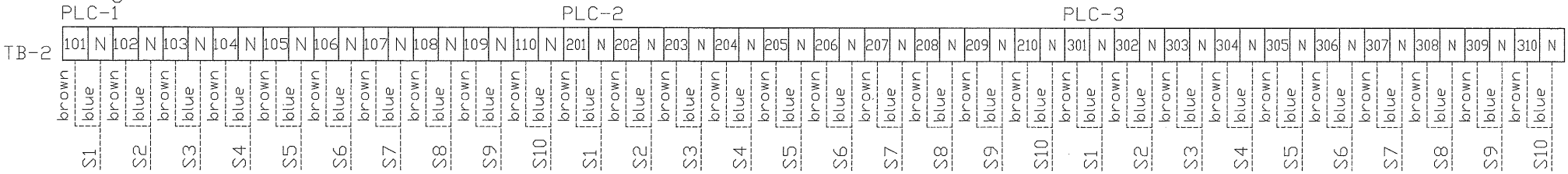

REV	DESCRIPTION	DATE	SIGN
2			
1	Correction of errors in voltage	2012/6/7	nakaike

KOWA CORP.
OSAKA JAPAN

CHECKED BY	DRAWN BY
Shimono 2012.6.7	宮崎 2010.1.21
APPROVED	DESIGNED BY
Kato Jun 7 12	Miyazaki 2009.8.26

TITLE
Oil flow sensor monitor 30P

DWG.No.	SHEET No.
e-KOF-CP-230 1	1/2
CFD.No.	
CODE No.	
DATE OF ISSUE	MFG. No.

協議印
出図先
購買
製造
客先
控
複写部数
A3
出図日

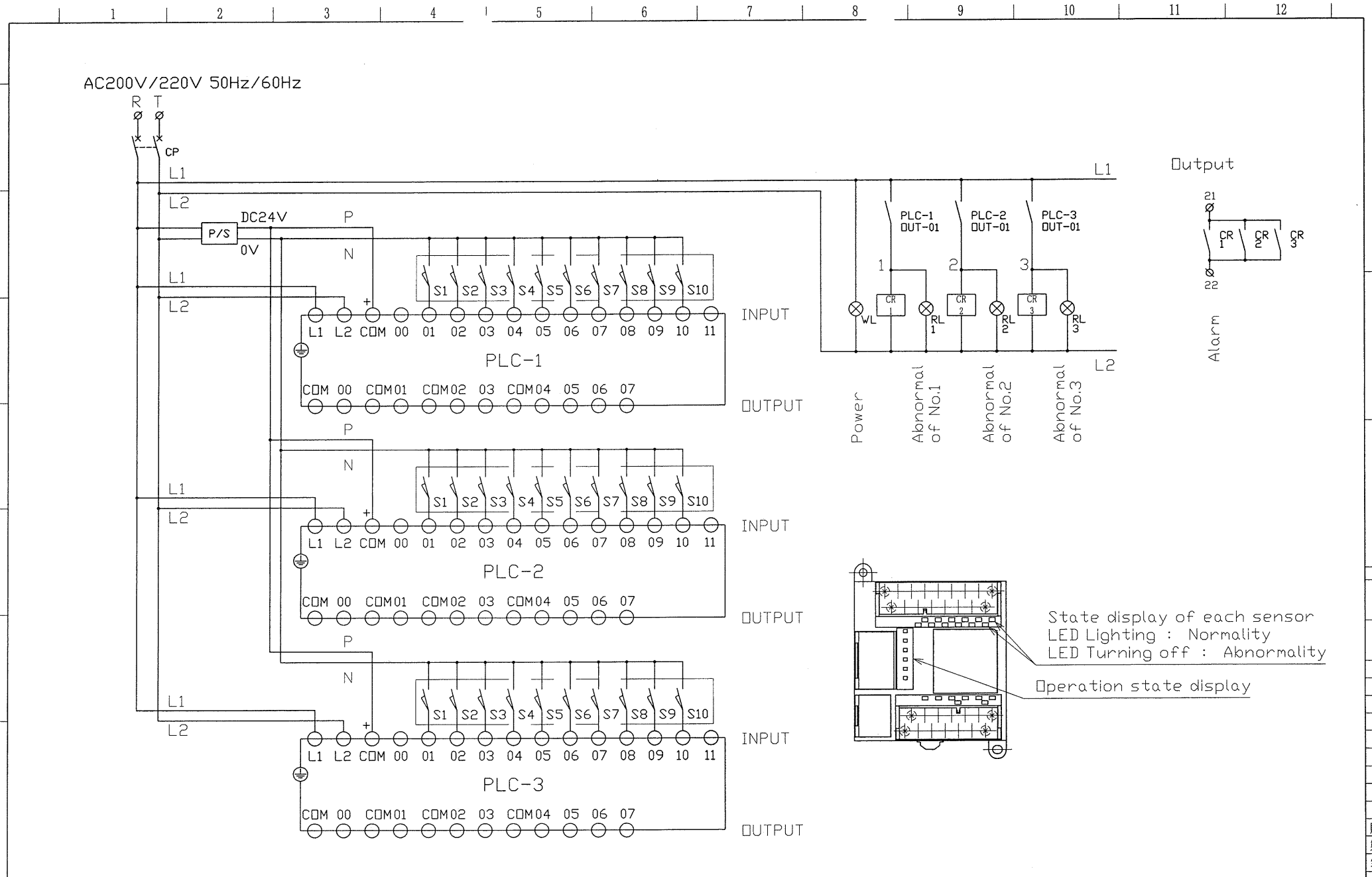

REV	DESCRIPTION	DATE	SIGN
2			
1			

KOWA CORP.
OSAKA JAPAN

CHECKED BY	DRAWN BY
Shimamo 2010.5.21	宮崎 2010.1.21
APPROVED	DESIGNED BY
Miyazaki 5.21'10	Miyazaki 2009.8.26

TITLE: Oil flow sensor monitor 30P

DWG.No. e-KOF-CP-230 0

SHEET No. 2/2

CFD.No.

CODE No.

DATE OF ISSUE

MFG. No.

協議印 出図先 購買 製造 客先 控 複写部数 A3 出図日

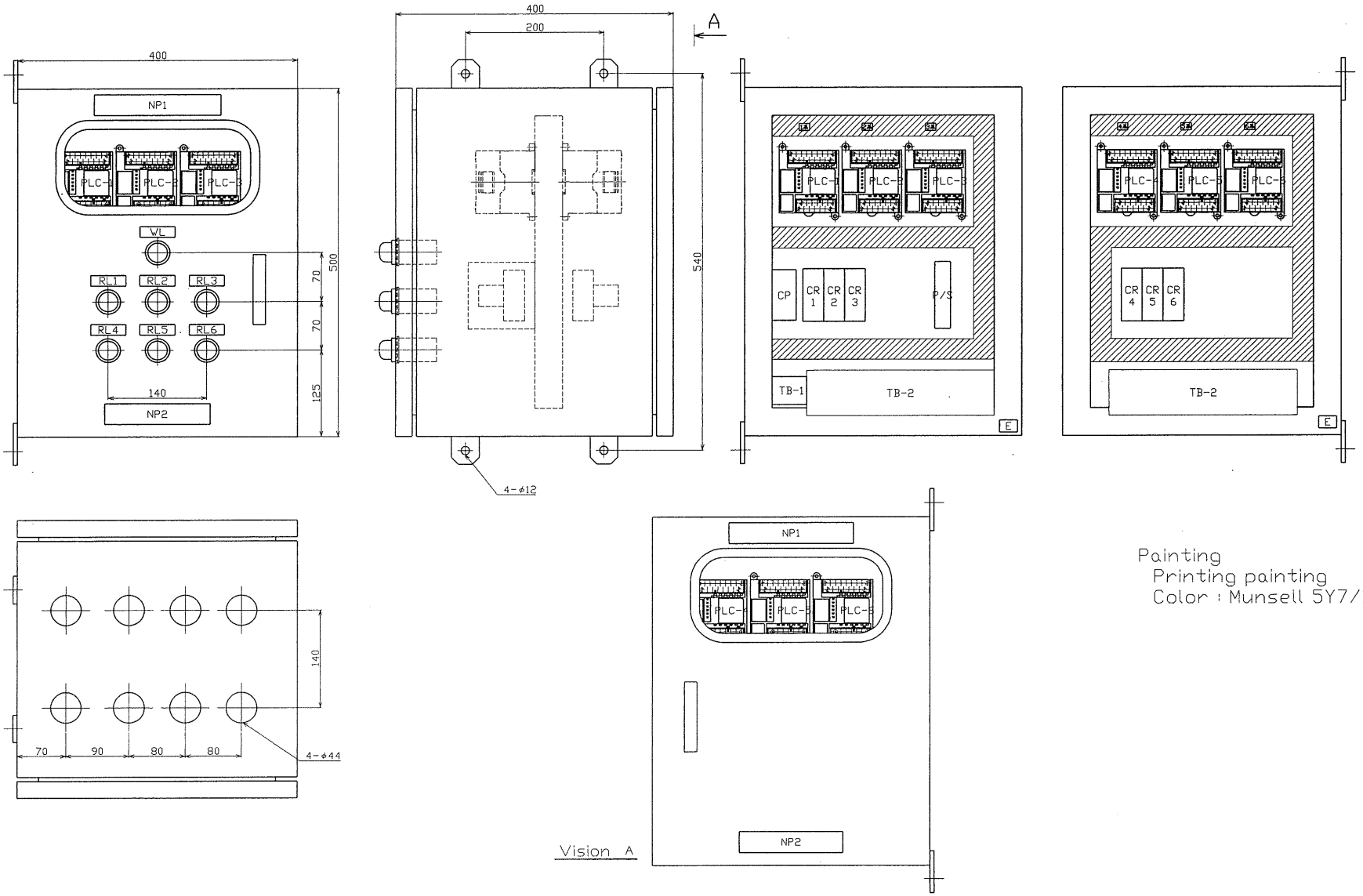

Painting
Printing painting
Color : Munsell 5Y7/1

REV	DESCRIPTION	DATE	SIGN
2			
1			

KOWA CORP.
OSAKA JAPAN

CHECKED BY	DRAWN BY
Shimono 2010.5.31	宮崎 2010.2.16
APPROVED	DESIGNED BY
Miyazaki 5.31.'10	Miyazaki 2010.2.9

TITLE
Oil flow
sensor monitor
60P

DWG.No.	SHEET No.
e-KOF-CP-160 △0	1/4
CFD.No.	
CODE No.	

DATE OF ISSUE | MFG. No.

協議印
出図先
購買
製造
客先
控
複写部数
A3
出図日

Parts list

Mark	Item	Model or Spec.	Q'ty
PLC	Sequencer	CP1E-E20DR-A	6
CP	Circuit protector	CP32F-M/2A	1
CR	Auxiliary relay	MY4N	6
P/S	Power supply	S8VS-03024	1
WL	Pilot lamp (W)	APN116DNW	1
RL	Pilot lamp (R)	APN116DNR	6
TB-1	Terminal	BNH15MW	4P
TB-2	Terminal for sensor	BC1S-1.5T	120P
-	Box	be equal to IP44	1

Name plate (Acrylic fiber)

Mark	Character	Q'ty	Size
NP1	Oil flow sensor monitor	2	180×30×3t
NP2	KOWA CORPORATION	2	150×30×3t
WL	Power	1	50×15×3t
RL1	Abnormal of No.1	1	
RL2	Abnormal of No.2	1	
RL3	Abnormal of No.3	1	
RL4	Abnormal of No.4	1	
RL5	Abnormal of No.5	1	
RL6	Abnormal of No.6	1	

Wiring

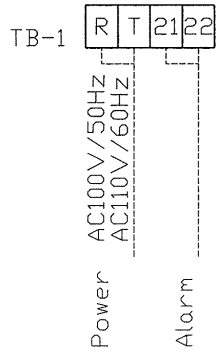

Note
Please put jumping wire in the corresponding terminal when there is a sensor not used.

Wiring for sensor

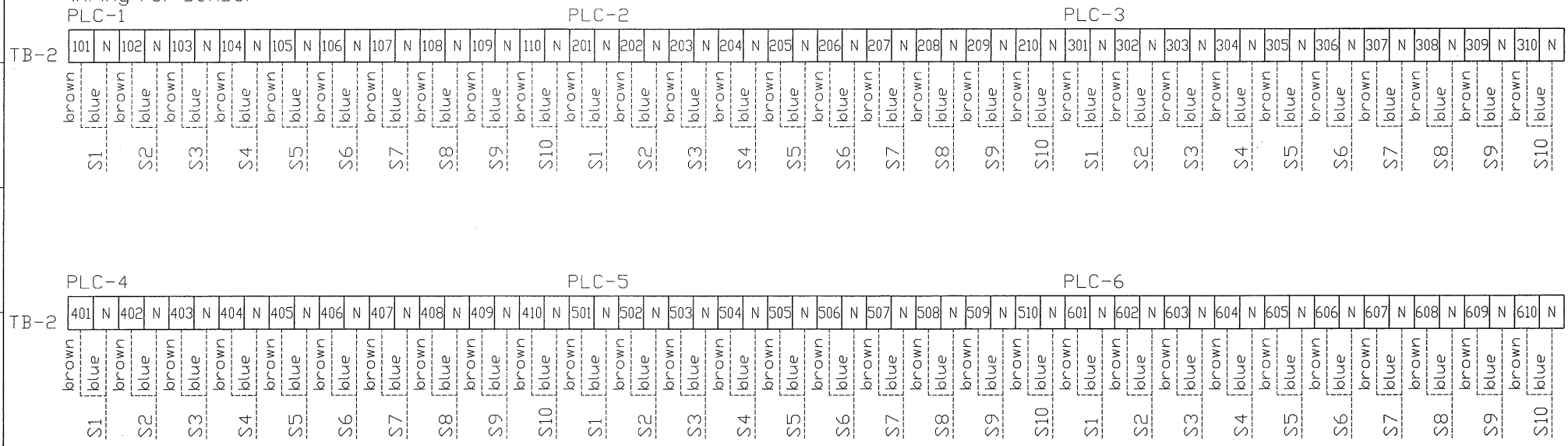

REV	DESCRIPTION	DATE	SIGN
2			
1			

KOWA CORP.
OSAKA JAPAN

CHECKED BY	DRAWN BY
Shimomo 2010.5.31	宮崎 2010.2.16
APPROVED	DESIGNED BY
Miyazaki 5.31'10	Miyazaki 2010.2.9

TITLE
Oil flow sensor monitor 60P

DWG.No.	SHEET No.
e-KOF-CP-160 0	2/4
CFD.No.	
CODE No.	

DATE OF ISSUE | MFG. No.

協議印
出図先
購買
製造
客先
控
複写部数
A3
出図日

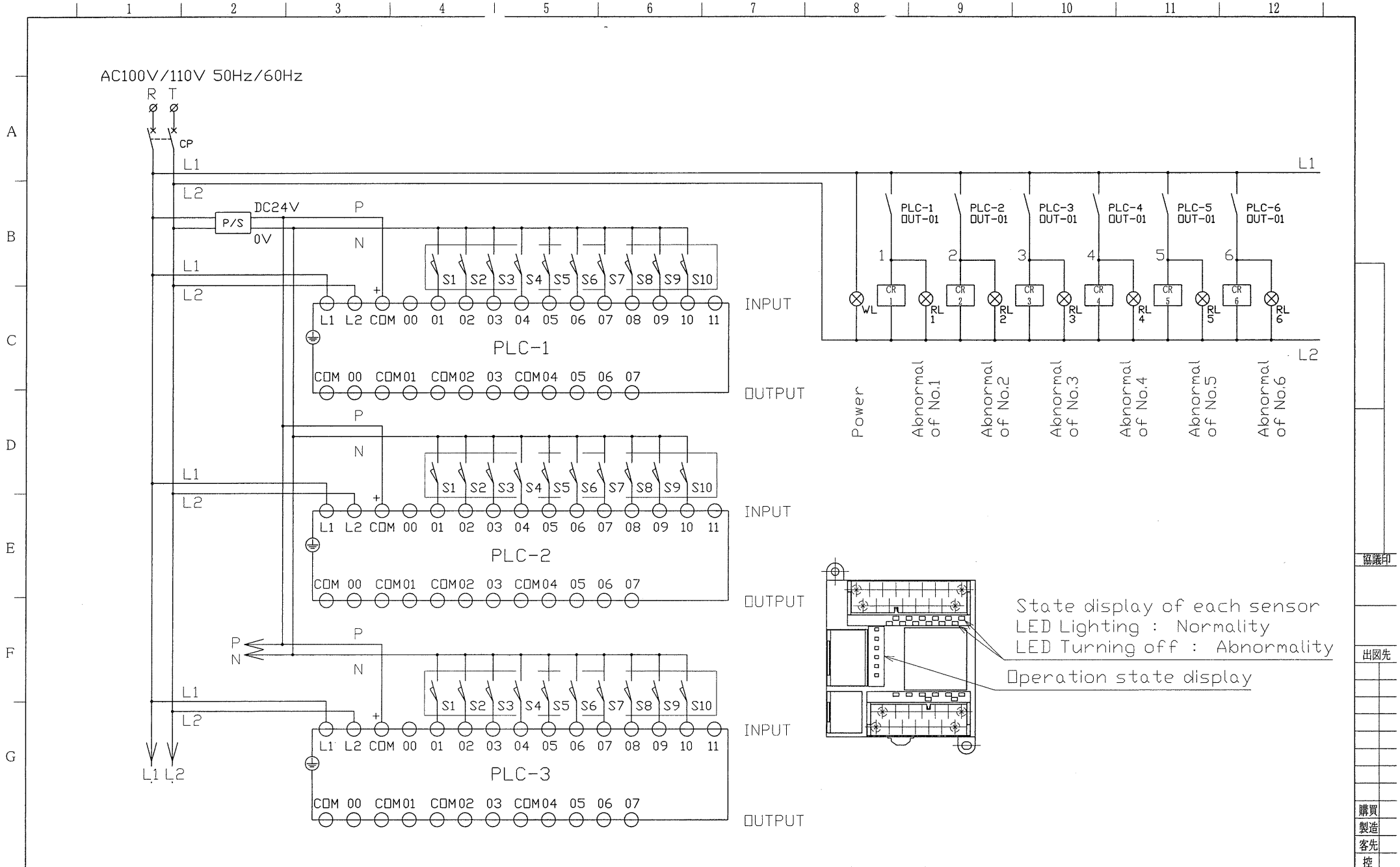

REV	DESCRIPTION	DATE	SIGN
2			
1			

KOWA CORP.
OSAKA JAPAN

CHECKED BY	DRAWN BY
Shimomura 2010.5.31	宮崎 2010.2.16
APPROVED	DESIGNED BY
Miyazaki 5.31'10	Miyazaki 2010.2.9

TITLE: Oil flow sensor monitor 60P

DWG.No. e-KOF-CP-160 0
SHEET No. 3/4
CFD.No.
CODE No.
DATE OF ISSUE
MFG. No.

A3

協議印
出図先
購買
製造
客先
控
複写部数
出図日

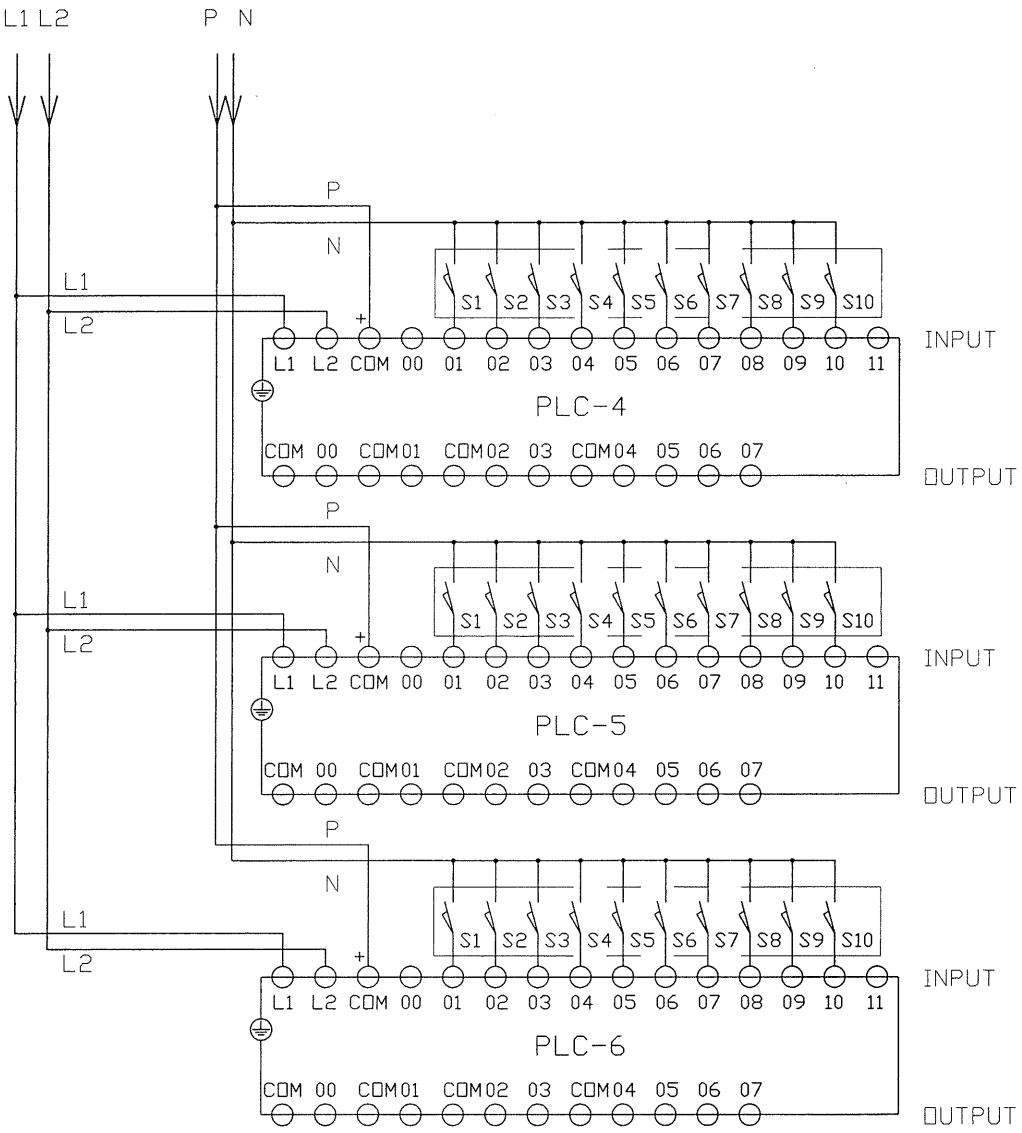

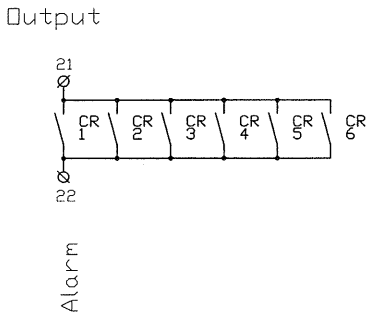

REV	DESCRIPTION	DATE	SIGN
2			
1			

KOWA CORP.
OSAKA JAPAN

CHECKED BY	DRAWN BY
Shimono 2010.5.31	宮崎 2010.2.16
APPROVED	DESIGNED BY
Miyazaki 5.31'10	Miyazaki 2010.2.9

TITLE: Oil flow sensor monitor 60P

DWG.No.	SHEET No.
e-KOF-CP-160 0	4/4
CFD.No.	
CODE No.	
DATE OF ISSUE	MFG. No.

A3

協議印
出図先
購買
製造
客先
控
複写部数
出図日

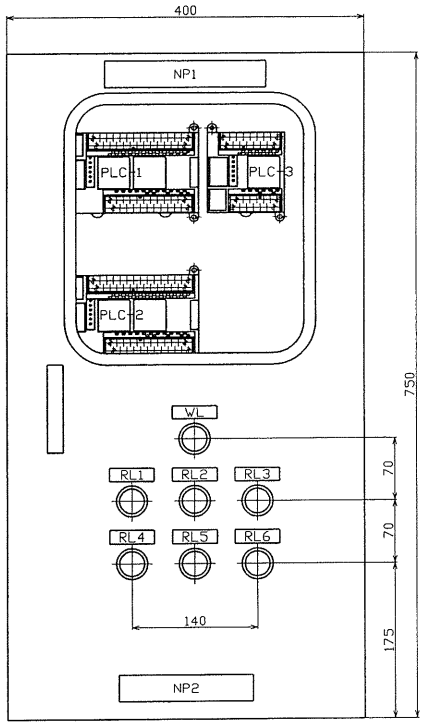

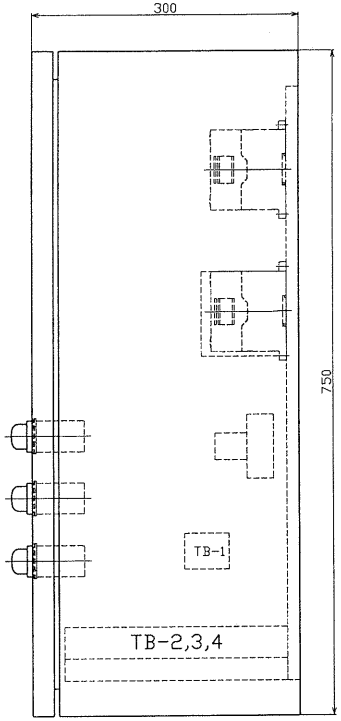

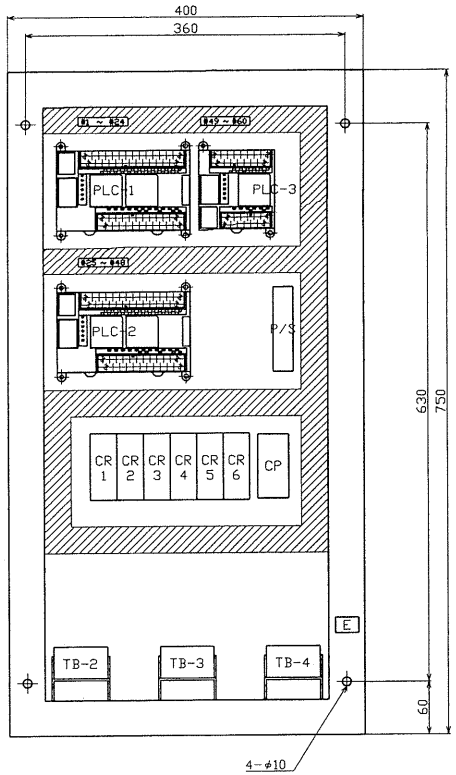

Painting
Printing painting
Color : Munsell 5Y7/1

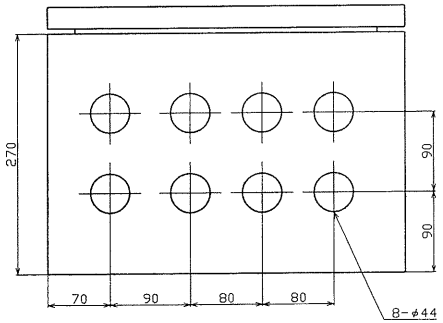

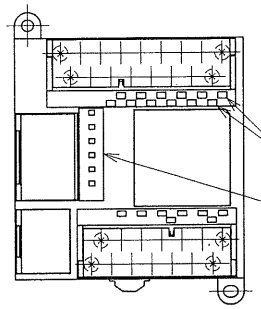

State display of each sensor
LED Lighting : Normality
LED Turning off : Abnormality

Operation state display

REV	DESCRIPTION	DATE	SIGN
2			
1			

KOWA CORP.
OSAKA JAPAN

CHECKED BY	DRAWN BY
Shimomo 2010.5.21	宮崎 2010.2.16
APPROVED	DESIGNED BY
Miyazaki 5.21'10	Miyazaki 2010.2.9

TITLE
Oil flow sensor monitor 60P

DWG.No.	SHEET No.
e-KOF-CP-160-L 0	1/4
CFD.No.	
CODE No.	
DATE OF ISSUE	MFG. No.

協議印
出図先
購買
製造
客先
控
複写部数
A3
出図日

Parts list

Mark	Item	Model or Spec.	Q'ty
PLC-1,2	Seqencer	CP1E-E40DR-A	2
PLC-3	Seqencer	CP1E-E20DR-A	1
CP	Circuit protector	CP32F-M/2A	1
CR	Auxiliary relay	MY4N	6
P/S	Power supply	S8VS-03024	1
WL	Pilot lamp (W)	APN116DNW	1
RL	Pilot lamp (R)	APN116DNR	6
TB-1	Terminal	BNH15MW	4P
TB-2,3,4	Terminal for sensor	BC1S-1.5T	3-40P
-	Box	be equal to IP44	1

Name plate (Acrylic fiber)

Mark	Character	Size
NP1	Oil flow sensor monitor	180 × 30 × 3t
NP2	KOWA CORPORATION	150 × 30 × 3t
WL	Power	50 × 15 × 3t
RL1	Abnormal of No.1	
RL2	Abnormal of No.2	
RL3	Abnormal of No.3	
RL4	Abnormal of No.4	
RL5	Abnormal of No.5	
RL6	Abnormal of No.6	

REV	DESCRIPTION	DATE	SIGN
2			
1			

KOWA CORP.
OSAKA JAPAN

CHECKED BY	DRAWN BY
Shimomo 2010.5.21	宮崎 2010.2.16
APPROVED	DESIGNED BY
Miyazaki 5.21.'10	Miyazaki 2010.2.9

TITLE: Oil flow sensor monitor 60P

DWG.No. e-KOF-CP-160-L △0

SHEET No. 2/4

A3

CFD.No.

CODE No.

DATE OF ISSUE

MFG. No.

協議印

出図先

購買

製造

客先

控

複写部数

出図日

Note
1.Please put jumping wire in the corresponding terminal when there is a sensor not used.
2.The number of the Flow meter: Every Ten discharge ports

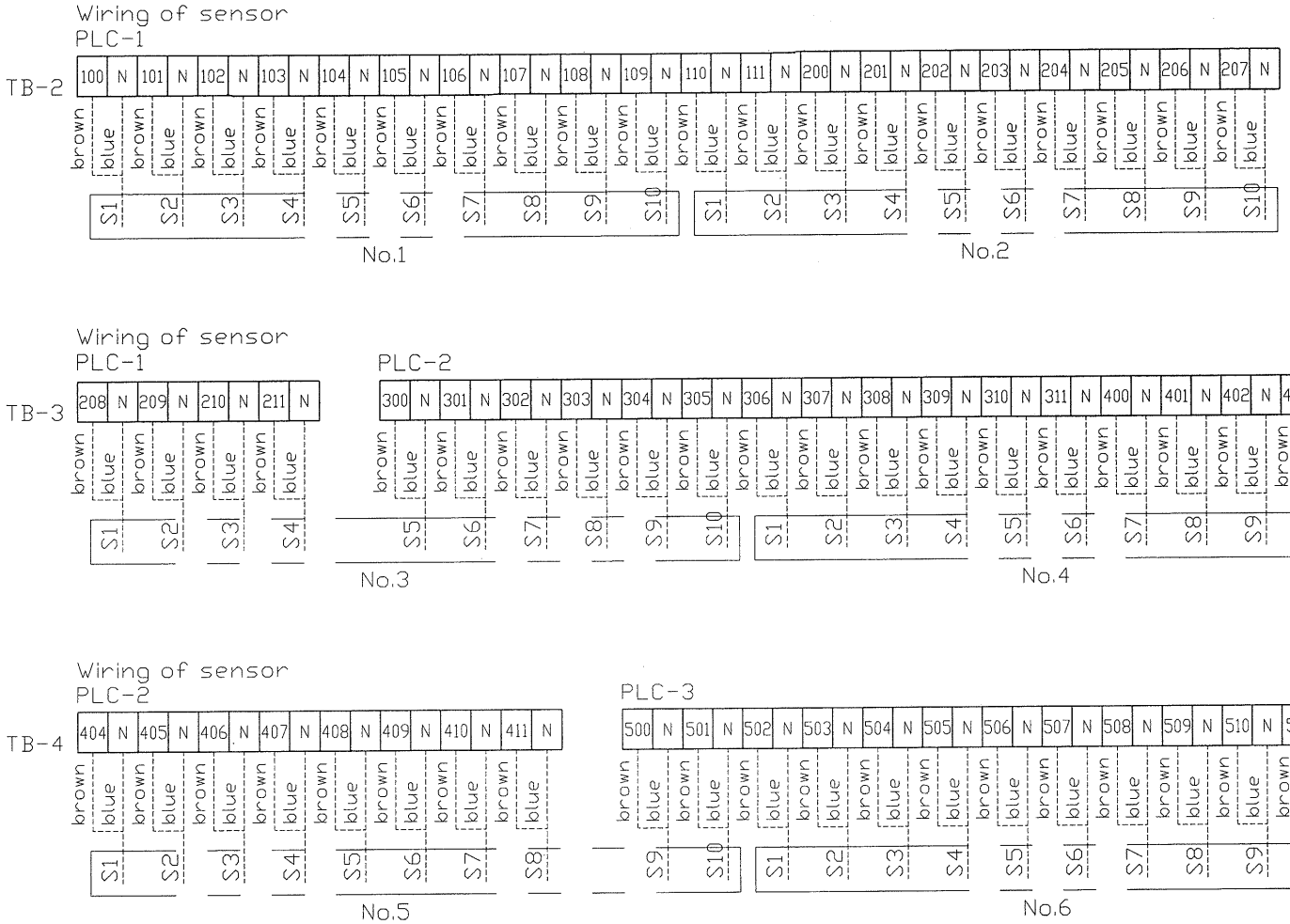

Wiring

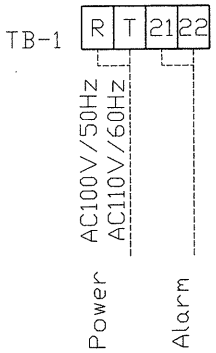

REV	DESCRIPTION	DATE	SIGN
2			
1			

KOWA CORP.
OSAKA JAPAN

CHECKED BY	DRAWN BY
Shimomu 2010.5.21	宮崎 2010.2.16
APPROVED	DESIGNED BY
Miyazaki 5/31'10	Miyazaki 2010.2.9

TITLE
Oil flow sensor monitor 60P

DWG.No. e-KOF-CP-160-L △0
SHEET No. 3/4
A3
CFD.No.
CODE No.
DATE OF ISSUE
MFG. No.

協議印
出図先
購買
製造
客先
控
複写部数
出図日

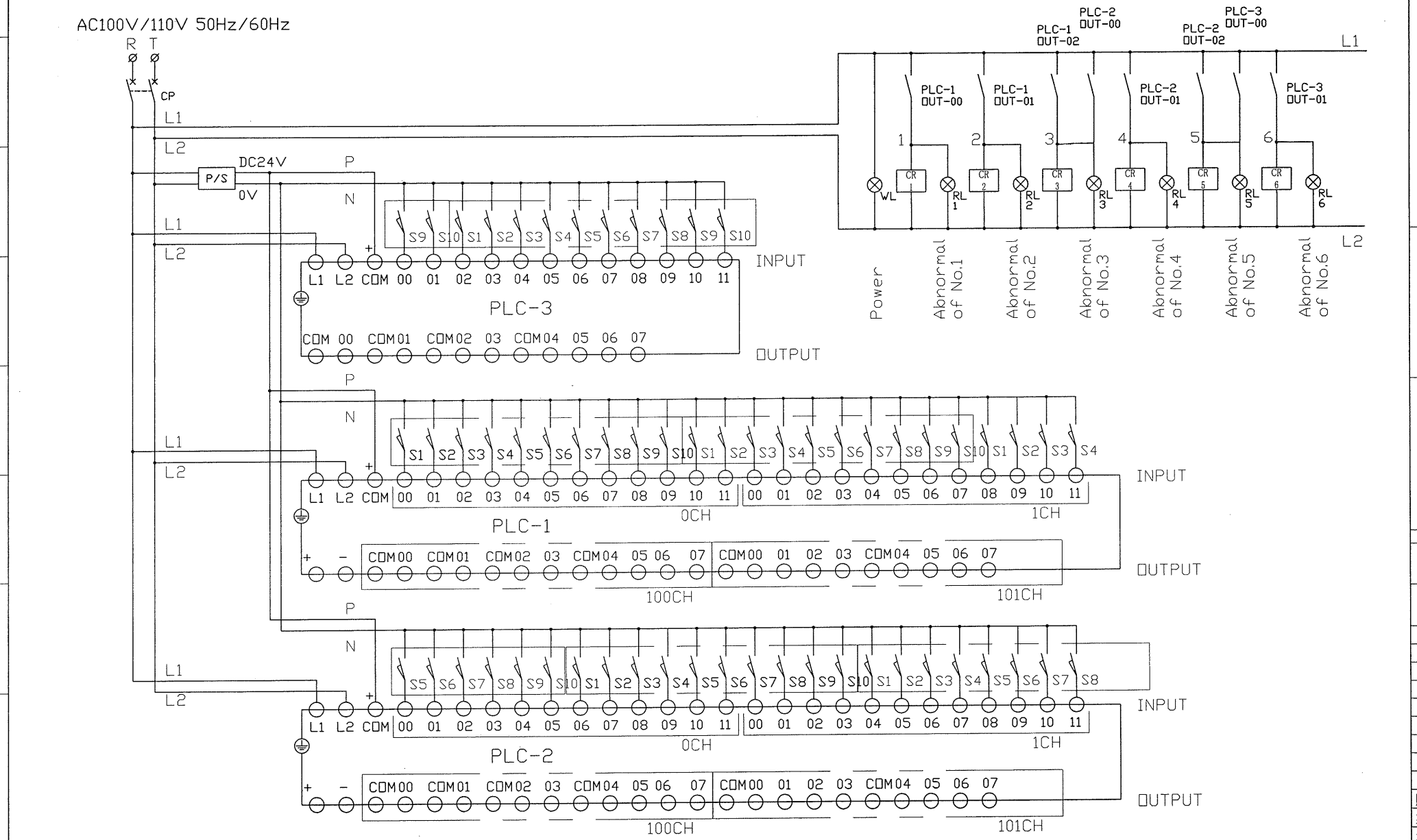

REV	DESCRIPTION	DATE	SIGN
2			
1			

KOWA CORP.
OSAKA JAPAN

CHECKED BY	DRAWN BY
Shimomu 2010.5.21	宮崎 2010.2.16
APPROVED	DESIGNED BY
Miyazaki 5.21'10	Miyazaki 2010.2.9

TITLE: Oil flow sensor monitor 60P

DWG.No. e-KOF-CP-160-L 0

SHEET No. 4/4

A3

CFD.No.

CODE No.

DATE OF ISSUE

MFG. No.

協議印

出図先

購買

製造

客先

控

複写部数

出図日

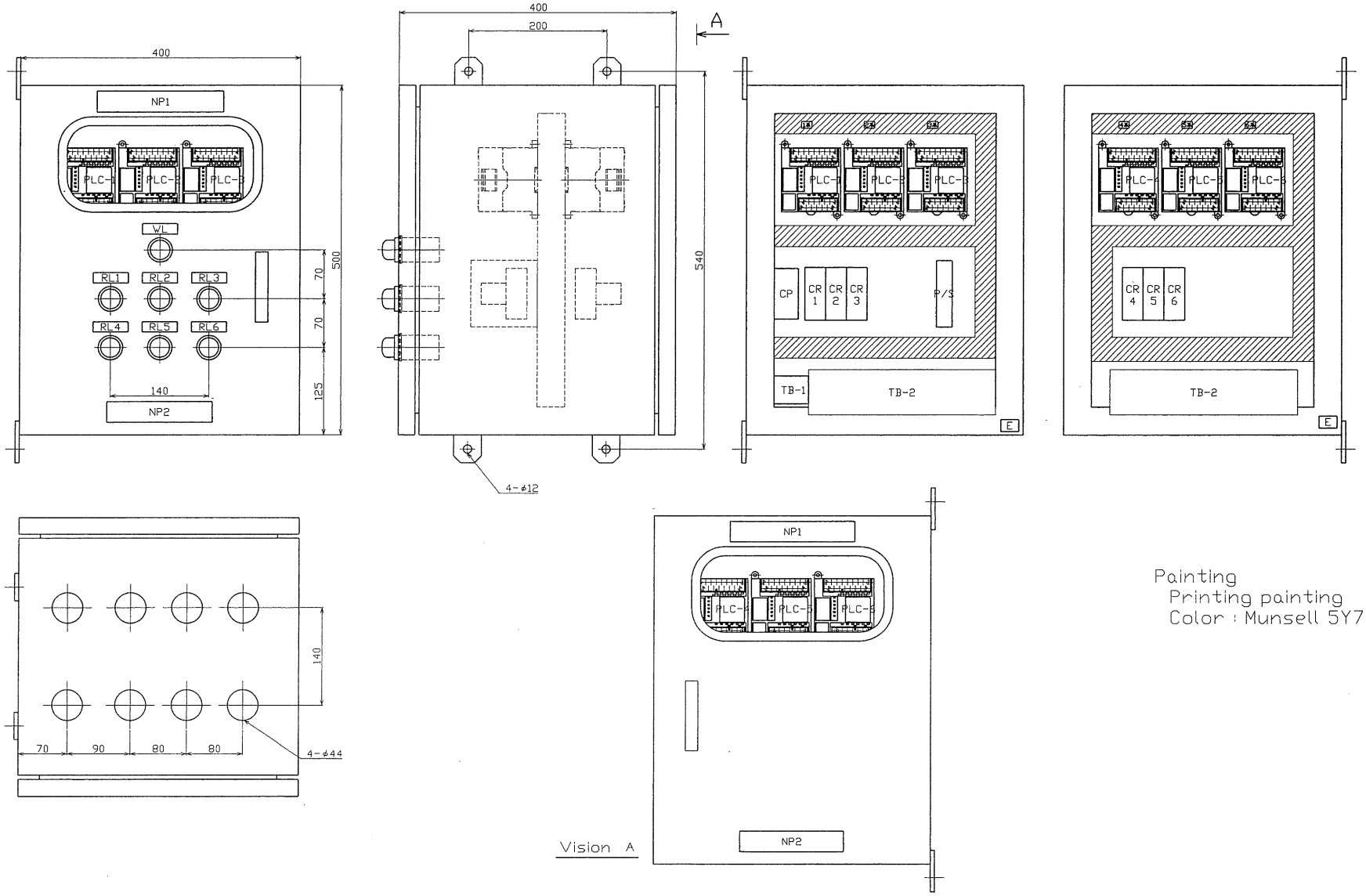

Painting
Printing painting
Color : Munsell 5Y7/1

REV	DESCRIPTION	DATE	SIGN
2			
1			

KOWA CORP.
OSAKA JAPAN

CHECKED BY	DRAWN BY
Shimomo 2010.2.3	宮崎 2010.2.16
APPROVED	DESIGNED BY
Miyazaki 2/31/10	Miyazaki 2010.2.9

TITLE
Oil flow
sensor monitor
60P

DWG.No.	SHEET No.
e-KOF-CP-260 0	1/4
CFD.No.	
CODE No.	

DATE OF ISSUE | MFG. No.

協議印
出図先
購買
製造
客先
控
複写部数
A3
出図日

Parts list

Mark	Item	Model or Spec.	Q'ty
PLC	Sequencer	CP1E-E20DR-A	6
CP	Circuit protector	CP32F-M/2A	1
CR	Auxiliary relay	MY4N	6
P/S	Power supply	S8VS-03024	1
WL	Pilot lamp (W)	APN126DNW	1
RL	Pilot lamp (R)	APN126DNR	6
TB-1	Terminal	BNH15MW	4P
TB-2	Terminal for sensor	BC1S-1.5T	120P
-	Box	be equal to IP44	1

Name plate (Acrylic fiber)

Mark	Character	Size
NP1	Oil flow sensor monitor	180×30×3t
NP2	KOWA CORPORATION	150×30×3t
WL	Power	50×15×3t
RL1	Abnormal of No.1	
RL2	Abnormal of No.2	
RL3	Abnormal of No.3	
RL4	Abnormal of No.4	
RL5	Abnormal of No.5	
RL6	Abnormal of No.6	

Wiring

Note
Please put jumping wire in the corresponding terminal when there is a sensor not used.

Wiring for sensor

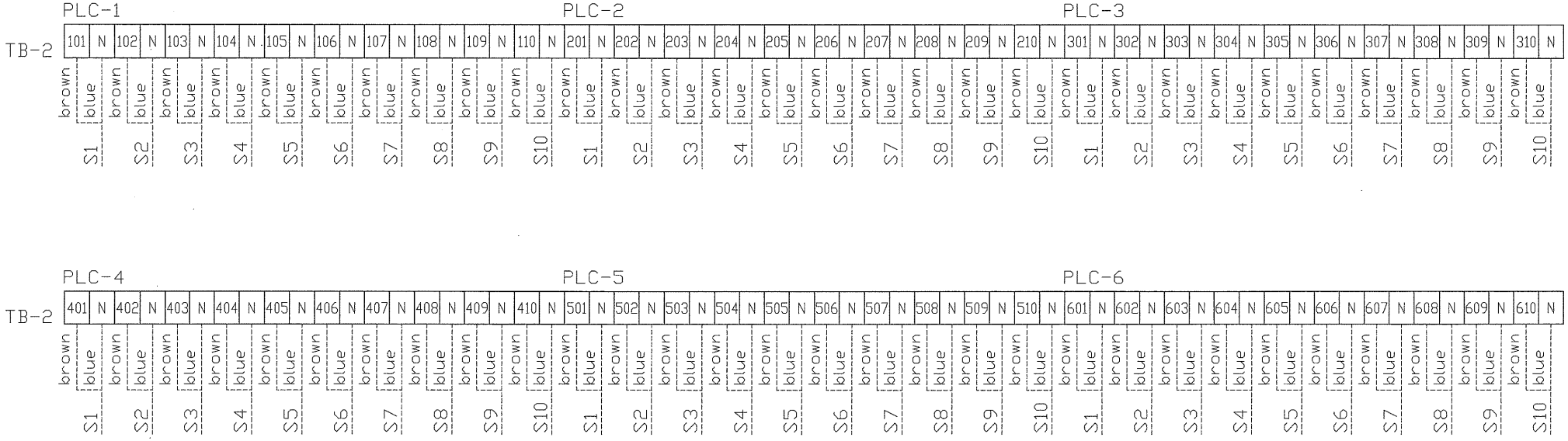

REV	DESCRIPTION	DATE	SIGN
2			
1	Correction of errors in voltage	2012/6/7	nakaike

KOWA CORP.
OSAKA JAPAN

CHECKED BY	DRAWN BY
Shimono 2012.6.7	宮崎 2010.2.16
APPROVED	DESIGNED BY
Koto Jun 7 '12	Miyazaki 2010.2.9

TITLE: Oil flow sensor monitor 60P

DWG.No. e-KOF-CP-260 1
SHEET No. 2/4
CFD.No.
CODE No.
DATE OF ISSUE
MFG. No.

協議印
出図先
購買
製造
客先
控
複写部数
A3
出図日

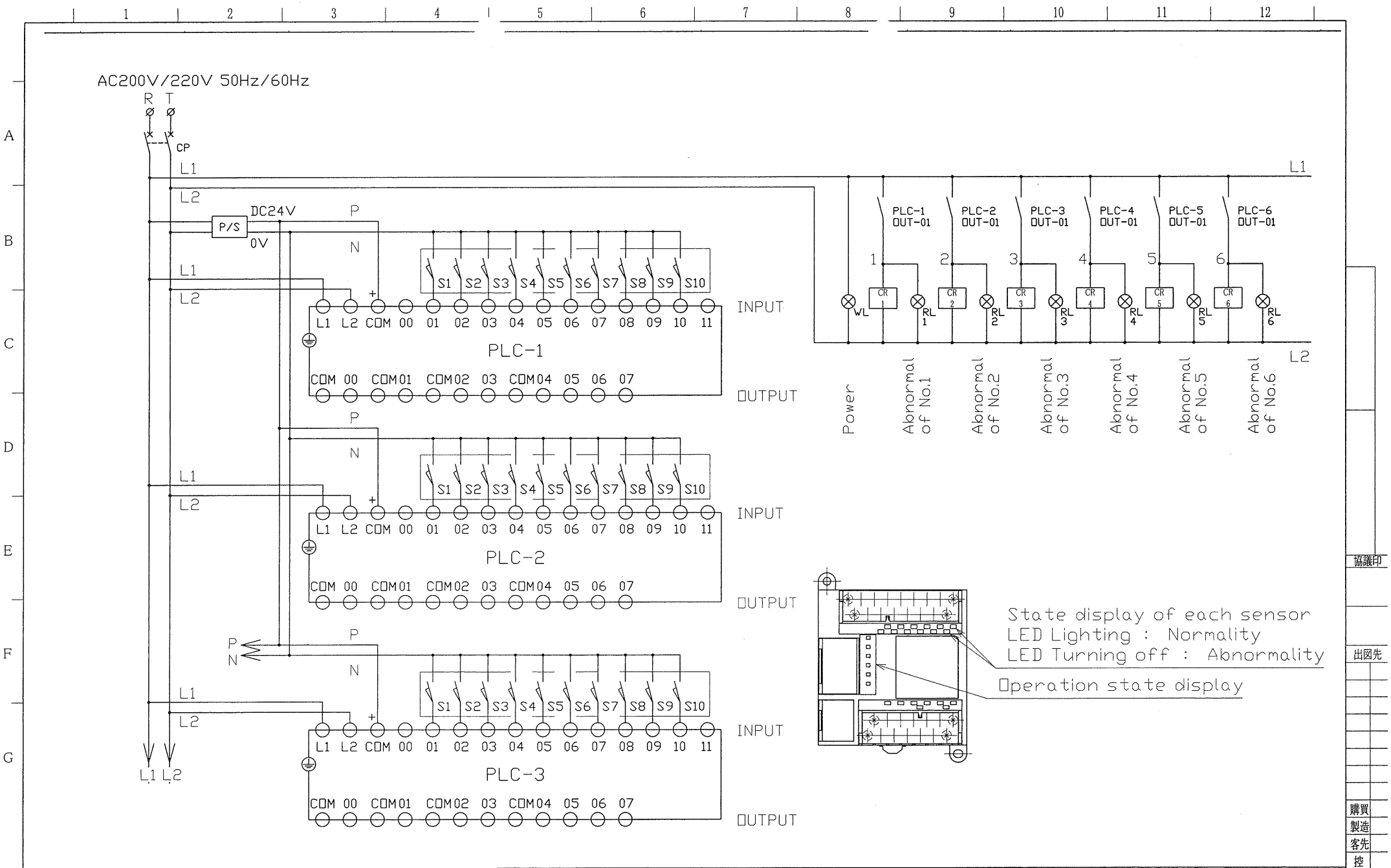

REV	DESCRIPTION	DATE	SIGN
2			
1			

KOWA CORP.
OSAKA JAPAN

CHECKED BY	DRAWN BY
Shimomo 2010.5.31	宮崎 2010.2.16
APPROVED	DESIGNED BY
Miyazaki 5.31'10	Miyazaki 2010.2.9

TITLE: Oil flow sensor monitor 60P

DWG.No. e-KOF-CP-260 0

SHEET No. 3/4

CFD.No.

CODE No.

DATE OF ISSUE

MFG. No.

協議印

出図先

購買

製造

客先

控

複写部数

A3

出図日

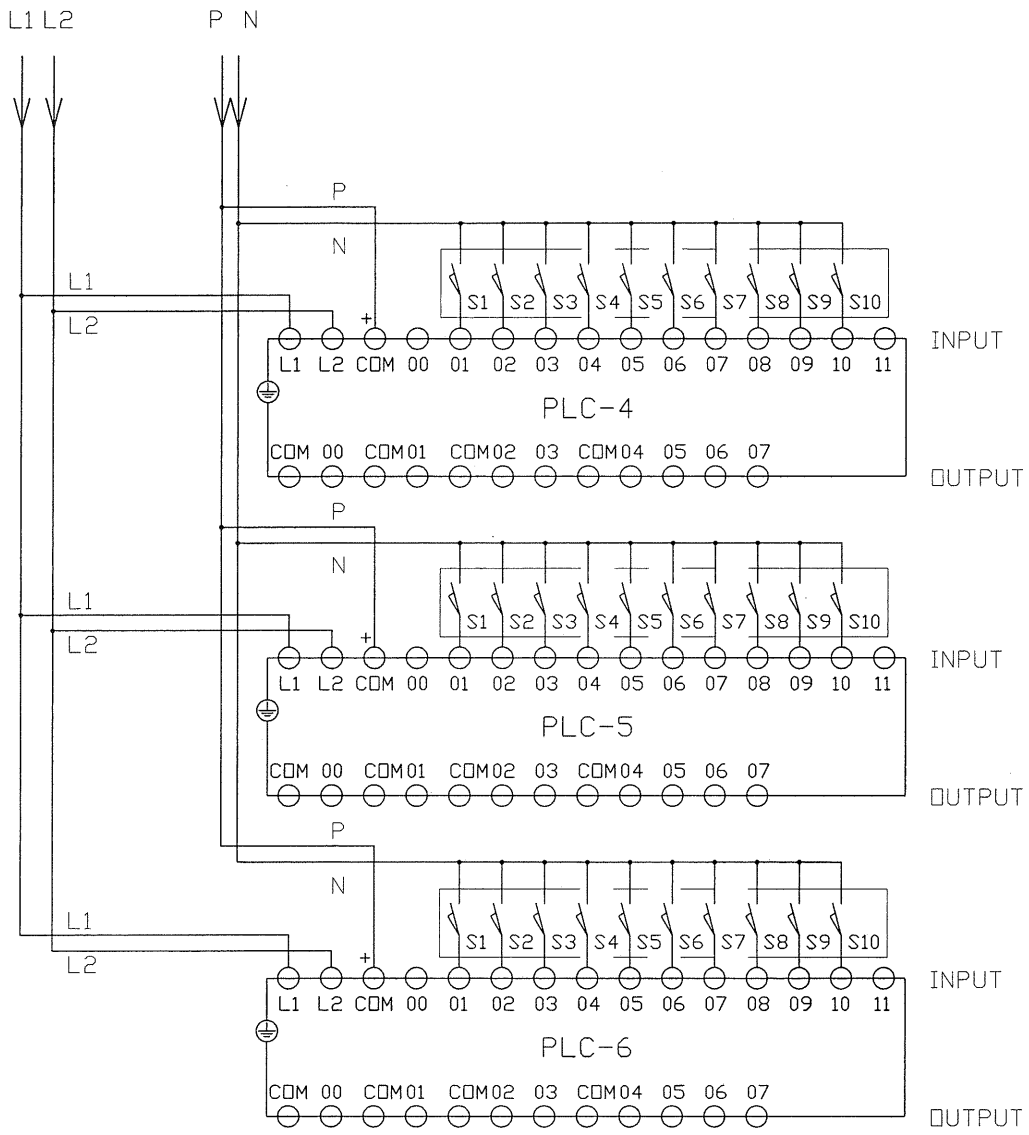

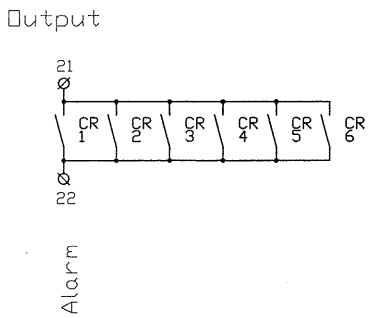

REV	DESCRIPTION	DATE	SIGN
2			
1			

KOWA CORP.
OSAKA JAPAN

CHECKED BY	DRAWN BY
Shimono 2010.5.31	宮崎 2010.2.16
APPROVED	DESIGNED BY
Miyazaki 5.31'10	Miyazaki 2010.2.9

TITLE: Oil flow sensor monitor 60P

DWG.No.	SHEET No.
e-KOF-CP-260 0	4/4
CFD.No.	
CODE No.	
DATE OF ISSUE	MFG. No.

A3

協議印
出図先
購買
製造
客先
控
複写部数
出図日

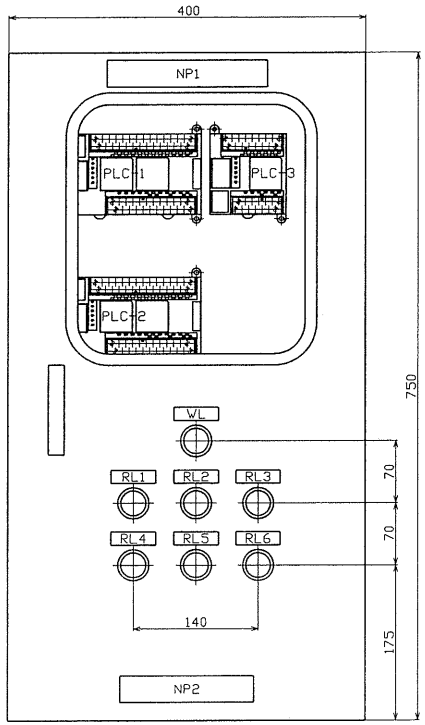

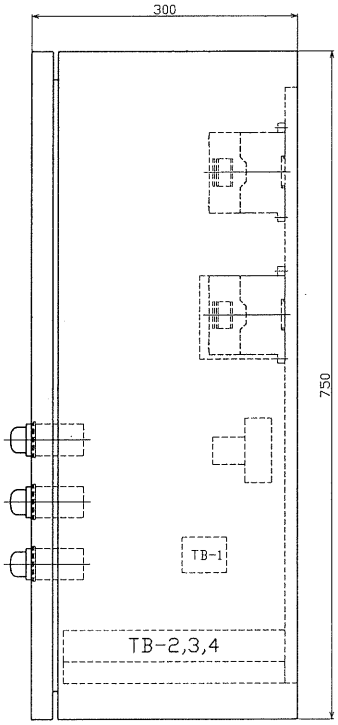

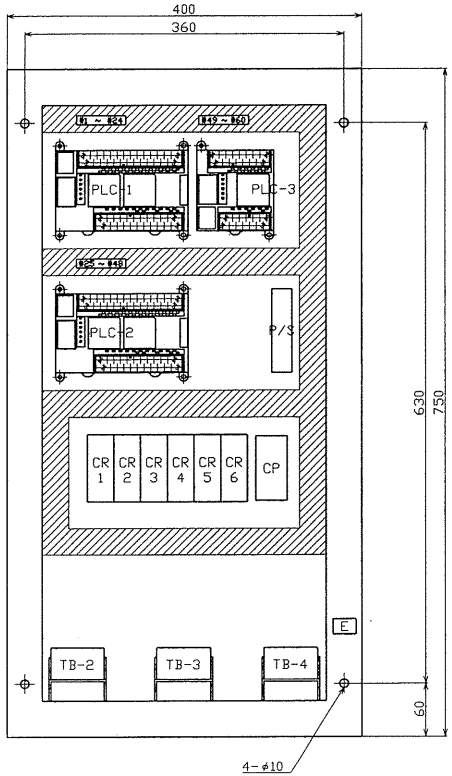

Painting
Printing painting
Color : Munsell 5Y7/1

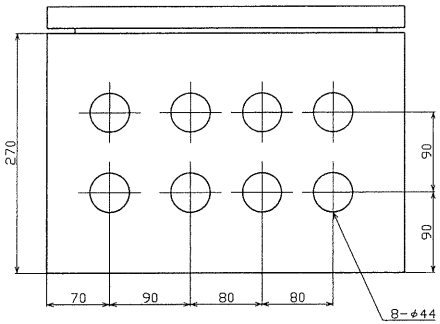

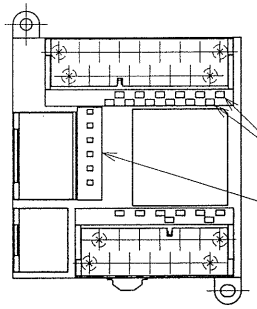

State display of each sensor
LED Lighting : Normality
LED Turning off : Abnormality

Operation state display

REV	DESCRIPTION	DATE	SIGN
2			
1			

KOWA CORP.
OSAKA JAPAN

CHECKED BY	DRAWN BY
Shimomo 2010.5.21	宮崎 2010.2.16
APPROVED	DESIGNED BY
Miyazaki 5.21.'10	Miyazaki 2010.2.9

TITLE
Oil flow sensor monitor 60P

DWG.No.	SHEET No.
e-KOF-CP-260-L 0	1/4
CFD.No.	
CODE No.	
DATE OF ISSUE	MFG. No.

A3

協議印
出図先
購買
製造
客先
控
複写部数
出図日

Parts list

Mark	Item	Model or Spec.	Q'ty
PLC-1,2	Seqencer	CP1E-E40DR-A	2
PLC-3	Seqencer	CP1E-E20DR-A	1
CP	Circuit protector	CP32F-M/2A	1
CR	Auxiliary relay	MY4N	6
P/S	Power supply	S8VS-03024	1
WL	Pilot lamp (W)	APN126DNW	1
RL	Pilot lamp (R)	APN126DNR	6
TB-1	Terminal	BNH15MW	4P
TB-2,3,4	Terminal for sensor	BC1S-1.5T	3-40P
-	Box	be equal to IP44	1

Name plate (Acrylic fiber)

Mark	Character	Size
NP1	Oil flow sensor monitor	180×30×3t
NP2	KOWA CORPORATION	150×30×3t
WL	Power	50×15×3t
RL1	Abnormal of No.1	
RL2	Abnormal of No.2	
RL3	Abnormal of No.3	
RL4	Abnormal of No.4	
RL5	Abnormal of No.5	
RL6	Abnormal of No.6	

REV	DESCRIPTION	DATE	SIGN
2			
1			

KOWA CORP.
OSAKA JAPAN

CHECKED BY	DRAWN BY
Shimomo 2010.5.21	宮崎 2010.2.16
APPROVED	DESIGNED BY
Miyazaki 5.21'10	Miyazaki 2010.2.9

TITLE: Oil flow sensor monitor 60P

DWG.No. e-KOF-CP-260-L 0
SHEET No. 2/4
CFD.No.
CODE No.
DATE OF ISSUE
MFG. No.

協議印
出図先
購買
製造
客先
控
複写部数
A3
出図日

Note
1.Please put jumping wire in the corresponding terminal when there is a sensor not used.
2.The number of the Flow meter: Every Ten discharge ports

Wiring of sensor
PLC-1

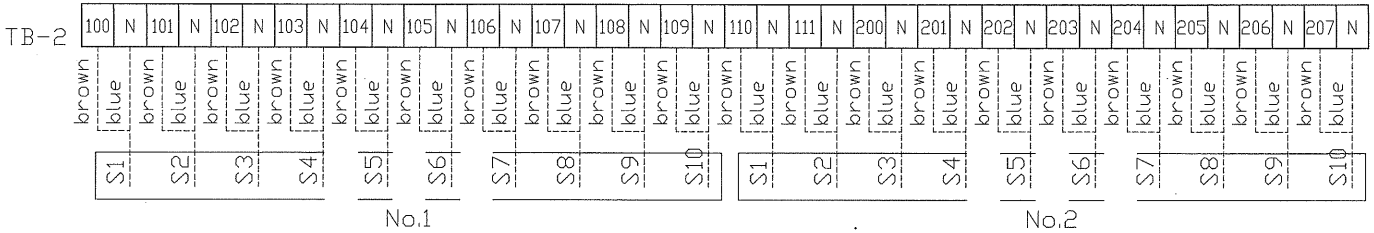

Wiring
Output

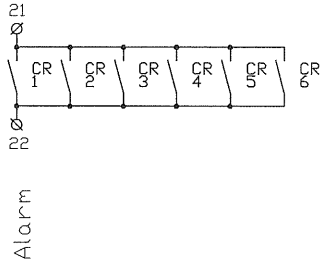

Wiring of sensor
PLC-1 PLC-2

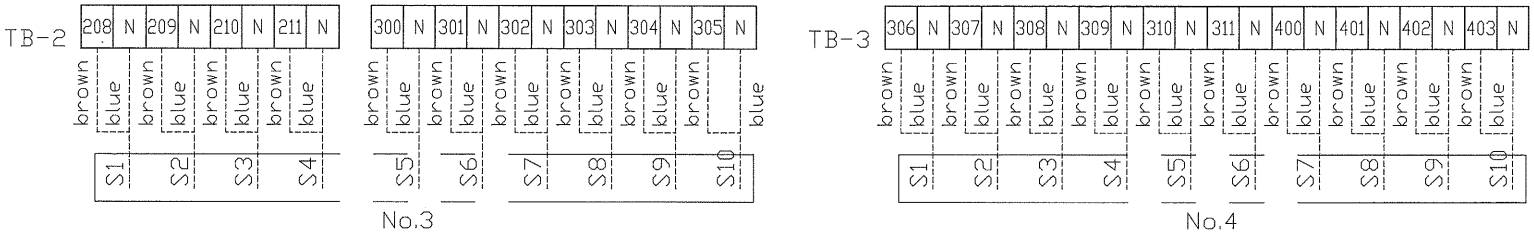

Wiring

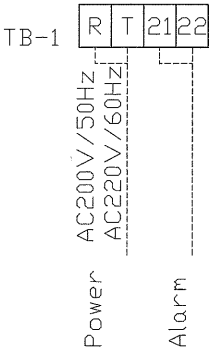

Wiring of sensor
PLC-2 PLC-3

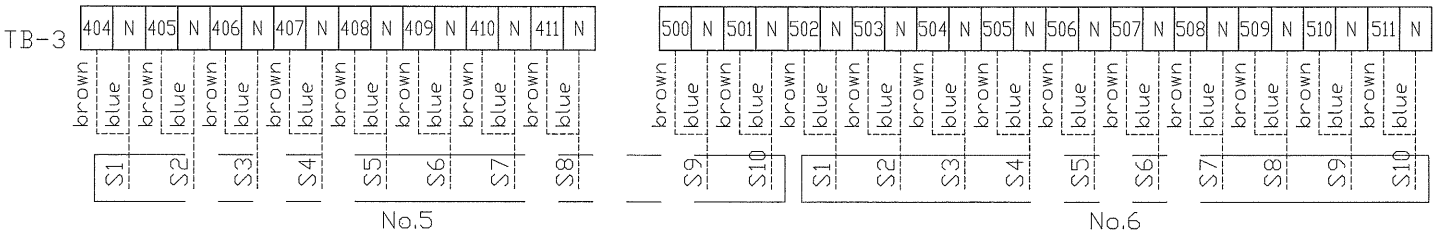

REV	DESCRIPTION	DATE	SIGN
2			
1			

KOWA CORP.
OSAKA JAPAN

CHECKED BY	DRAWN BY
Shimomura 2012.6.7	宮崎 2010.2.16
APPROVED	DESIGNED BY
Kato 12.7.12	Miyazaki 2010.2.9

TITLE
Oil flow sensor monitor 60P

DWG.No.	SHEET No.
e-KOF-CP-260-L 0	3/4
CFD.No.	
CODE No.	
DATE OF ISSUE	MFG. No.

A3

協議印
出図先
購買
製造
客先
控
複写部数
出図日

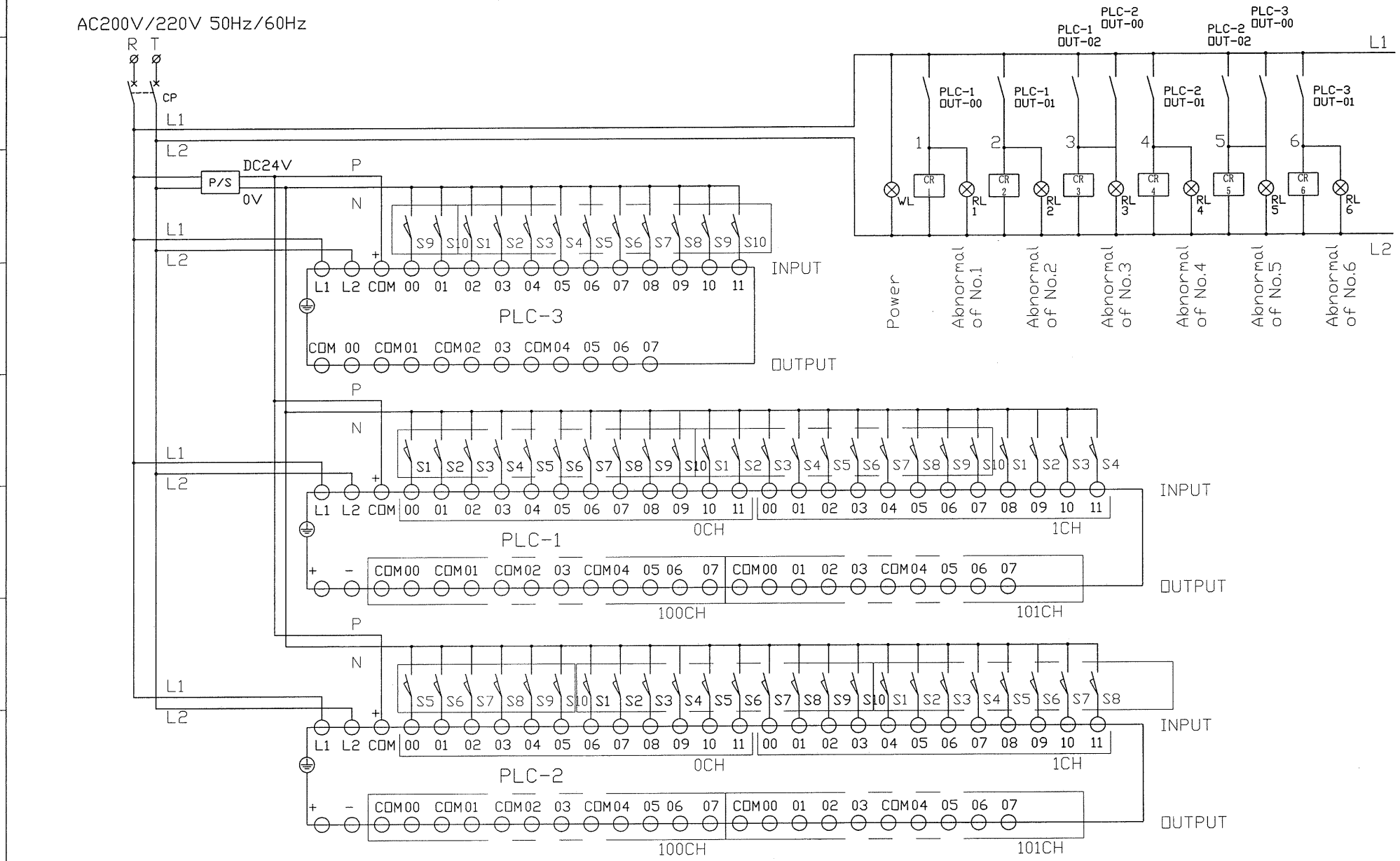

REV	DESCRIPTION	DATE	SIGN
2			
1			

KOWA CORP.
OSAKA JAPAN

CHECKED BY	DRAWN BY
Shimano 2010.5.21	宮崎 2010.2.16
APPROVED	DESIGNED BY
Miyazaki 5.21.'10	Miyazaki 2010.2.9

TITLE: Oil flow sensor monitor 60P

DWG.No. e-KOF-CP-260-L 0

SHEET No. 4/4

CFD.No.

CODE No.

DATE OF ISSUE

MFG. No.

A3

出図日

協議印

出図先

購買

製造

客先

控

複写部数

改訂REV	改定内容 DISCRIPTION	日付 DATE	担当SIGN
1	上限出力について追記。	H13/6/21	高田
2	追記。	H14/4/19	高田
3	10A/SPS追加。	H14/7/22	高田
4	10U追加。スイッチ位置追記	H21/4/8	加藤
5	調査により警報位置を変更	H21/4/18	宮崎
6	制御盤チェンジによる警報位置の変更	H21/5/11	加藤
7	名称(型式)統一化による変更、図面番号変更	2010.1.12	宮崎

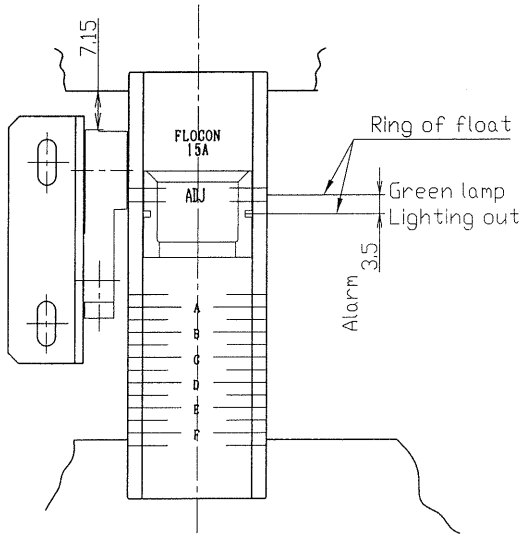

KOF-A-15

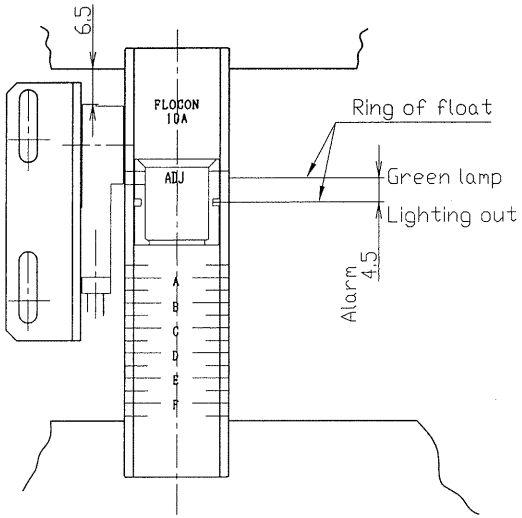

KOF-A-10

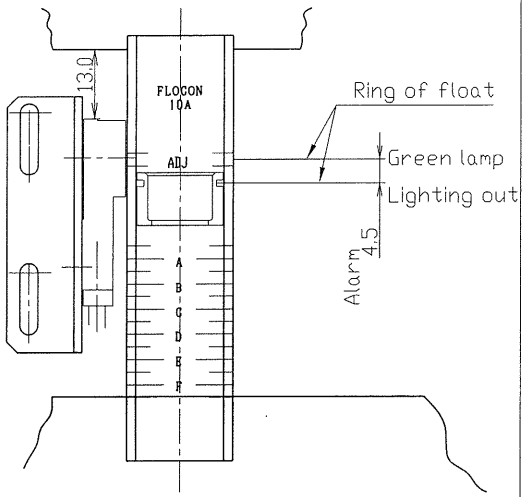

KOF-A-10/SPS

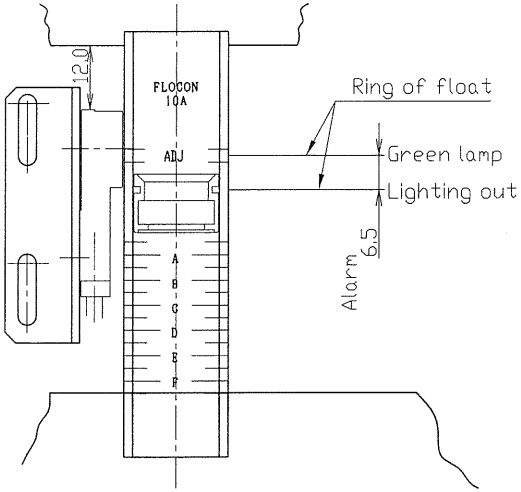

KOF-A-10U

Light of a sensor(LED)
Green : Safty area
Red : Anstable area
Lighting out : Decline of Flow rate
(Alarm line)

CUSTOMER	
SPECIFICATION	
CHECKED BY: Shimomu 2010.5.31	DRAWN BY: T.T H12-11-30
APPROVED BY: Miyazaki 5.31.'10	DESIGNED BY: 高田 H12-11-30
Low level alarm	
KOWA CORP. OSAKA JAPAN	DWG.No. e-KOF-SENSOR (7)
	CFD.No.
	CODE No.
3RD ANGLE PROJECTION	SCALE
	DATE OF ISSUE / MFG.No.

協議中
出図先
購買
製造
客先
控
複写部数
A3
出図日

(A3)